MOSTOSTAL
SCAFFOLDING
FORMWORK

ALTRAD

OVER 20 YEARS OF ALTRAD MOSTOSTAL – **STRENGTH, MODERNITY, STABILITY**

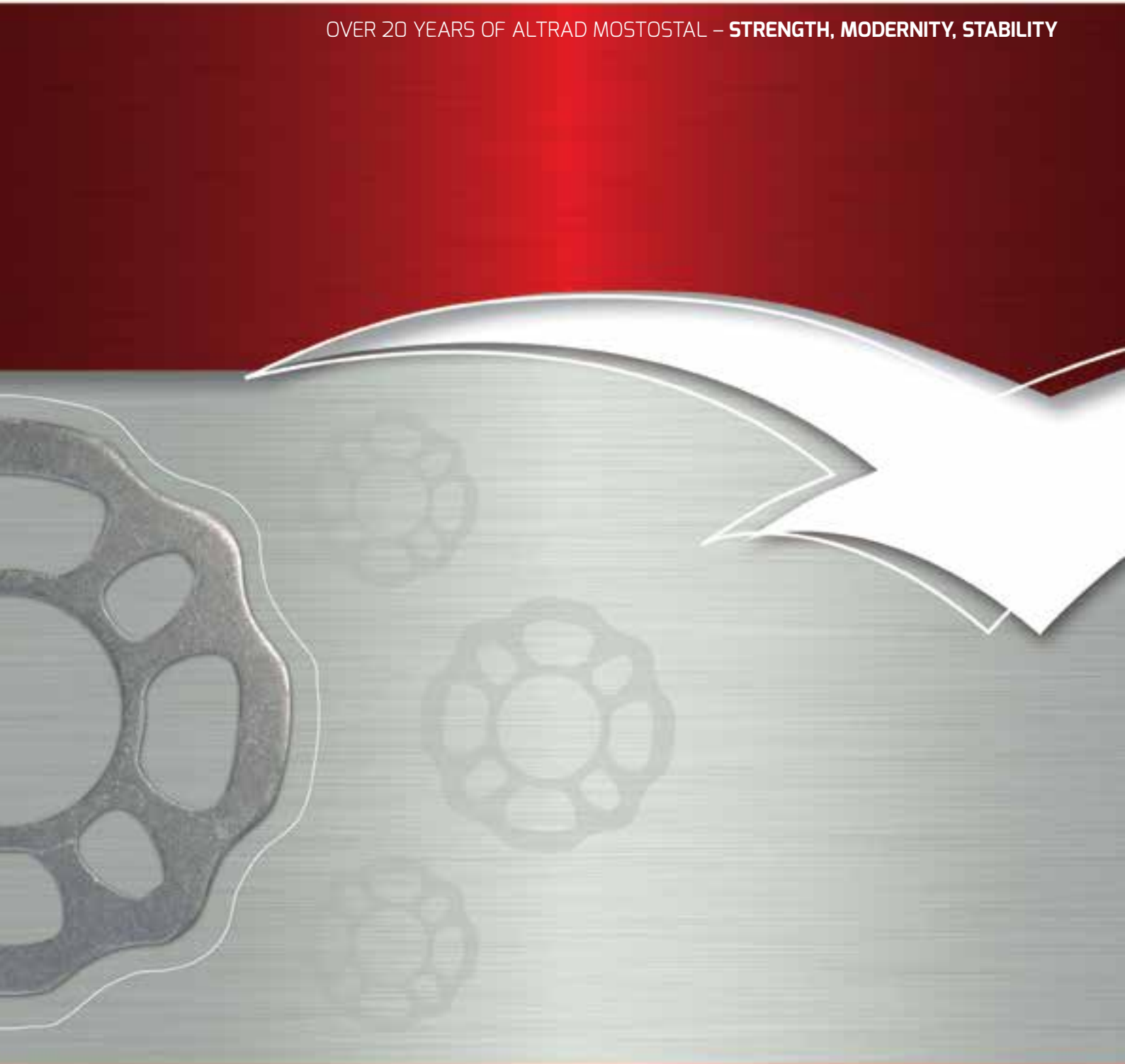

CATALOGUE - **ROTAX Plus MODULAR SCAFFOLDING**

CATALOGUE

ROTAX Plus
MODULAR SCAFFOLDING

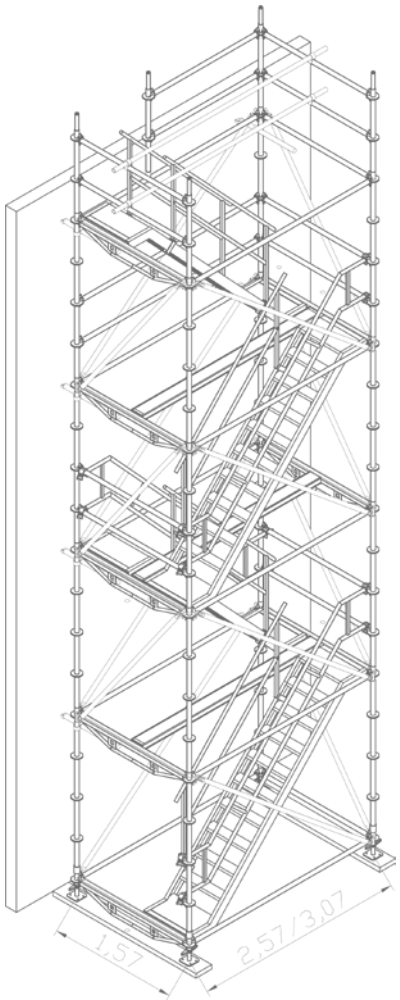

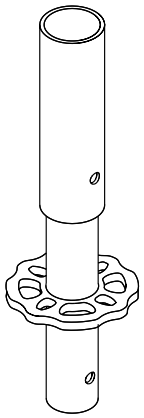

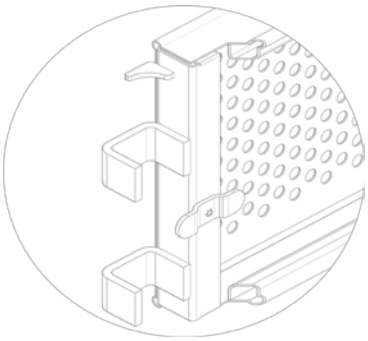

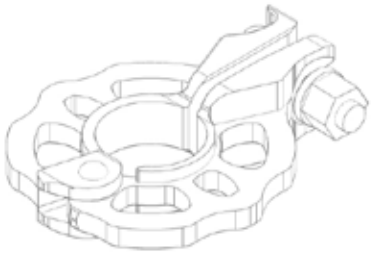

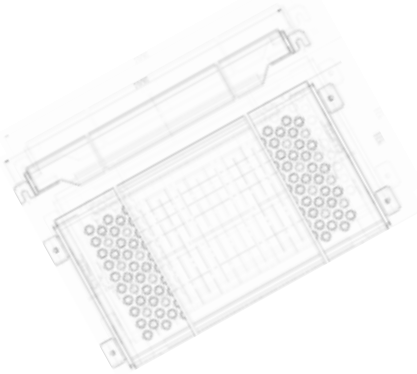

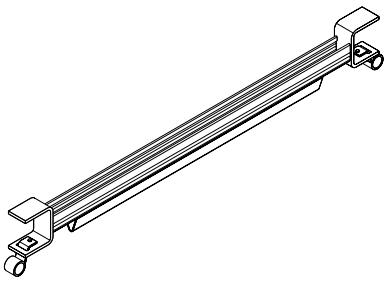

www.**altrad-mostostal**.pl

/altradmostostal

ALTRAD

MOSTOSTAL
SCAFFOLDING
FORMWORK

TABLE OF CONTENTS

I ROTAX Plus MODULAR SCAFFOLDING

1. Introduction 4
2.Application 5
3. Example of a ROTAX Plus set 5

II Modular scaffolding – ROTAX Plus – GENERAL AND TECHNICAL INFORMATION

4. Loads 6

III Modular scaffolding – ROTAX Plus – COMPONENTS

5. List of ROTAX components 8

IV Modular scaffolding – STANDS – COMPONENTS

6. List of STAND components 33

V Modular scaffolding – STANDS – EXAMPLES OF SETS

7. Altrad Event Stage – complete with stage platforms 41
8. Altrad Event Stand – complete with steel platforms 43

VI Modular scaffolding – ROTAX Plus – ADDITIONAL TABLES

9. Girder effective load capacity 44
10. Connector effective loads 45
11. Platform loads 45
12. Permissible span for moveable platforms made of wood or planks 46
13. Transoms complete with perforated platforms 46
14. Adjustable base jack load capacity 47

VII Modular scaffolding – ROTAX Plus – GATE PASSAGES

15. Gate passages 47

VIII Modular scaffolding – ROTAX Plus – ALUMINIUM PLATFORMS

16. Aluminium platforms 48

IX Modular scaffolding – ROTAX Plus – EXAMPLES OF MOBILE SCAFFOLDING

17. Wall mobile scaffolding – ROTAX Plus system 50
18. Ceiling mobile scaffolding – ROTAX Plus system 51

X Modular scaffolding – ROTAX Plus – STAIRCASES

19. Free-standing staircase – ROTAX Plus system 52
20. Free-standing staircase with load-bearing beam – ROTAX Plus system 53
21. Staircase at scaffolding – ROTAX Plus system 54

SCAFFOLDING COMMISSION PROTOCOL 55
Localization of ALTRAD-MOSTOSTAL 56

ROTAX Plus
MODULAR SCAFFOLDING

1. Introduction

The next issue of the ROTAX Plus POLE SCAFFOLDING catalogue presents a number of new solutions implemented into the manufacturing programme over the past four years.
A stand system partially based on typical ROTAX Plus system components is our new offering.
The whole line of existing components also includes very practical modifications.
We have also proposed a new, simplified and more intuitive catalogue layout to facilitate the use of its content.
This issue is supplemented with new figures which show the application of individual ROTAX Plus system components so that it is more readable.
Finally, it is expanded with additional and usable tables to facilitate the selection of appropriate system components for your scaffolding structures to make optimum technical and economical designs.
New solutions include a new console, new transom solutions, stairs beams used to erect staircases based on typical steel platforms.

- ROTAX Plus – always modern, innovative and economical solutions.
- ROTAX Plus – logical and fast scaffolding assembly system.
- ROTAX Plus – construction site safety guaranteed.

Radom Cathedral

2. Application

ROTAX Plus system scaffolding is used as:
- spatial structures;
- scaffolding of irregular shape;
- platforms for working at height;
- supporting (load-bearing) structures – supporting towers;
- mobile scaffolding;
- suspended scaffolding;
- facade scaffolding.

Moreover, basing on the ROTAX scaffolding you can erect external staircases to form circulation paths between the levels. Single and double staircases are available. The staircases are free-standing structures (anchored to a building) or installed at the scaffolding (permanently fixed to it).
External staircases are typically installed in the 3.07 m or 2.57 m bay. They are constructed of serial system components and expanded only with aluminium stairs, internal and external railings.
Staircases facilitate access to the appropriate building level where the formwork is installed, concrete is laid or other construction works are performed. You can assemble the ROTAX Plus scaffolding as mobile structures where the given platform will be fitted with the guide beam and road wheels. This solution is particularly desirable during the construction, assembly and inspection works where erecting the scaffolding for a longer time is not possible or required.
The ROTAX Plus system adapts optimally to facilities or atypical and irregular shapes due to e.g. steel and aluminium girders which allow you to:
- suspend platforms especially when constructing platforms (girder with the U-section);
- construct passages under the scaffolding, spans over structural building parts.

3. Example of a ROTAX Plus set

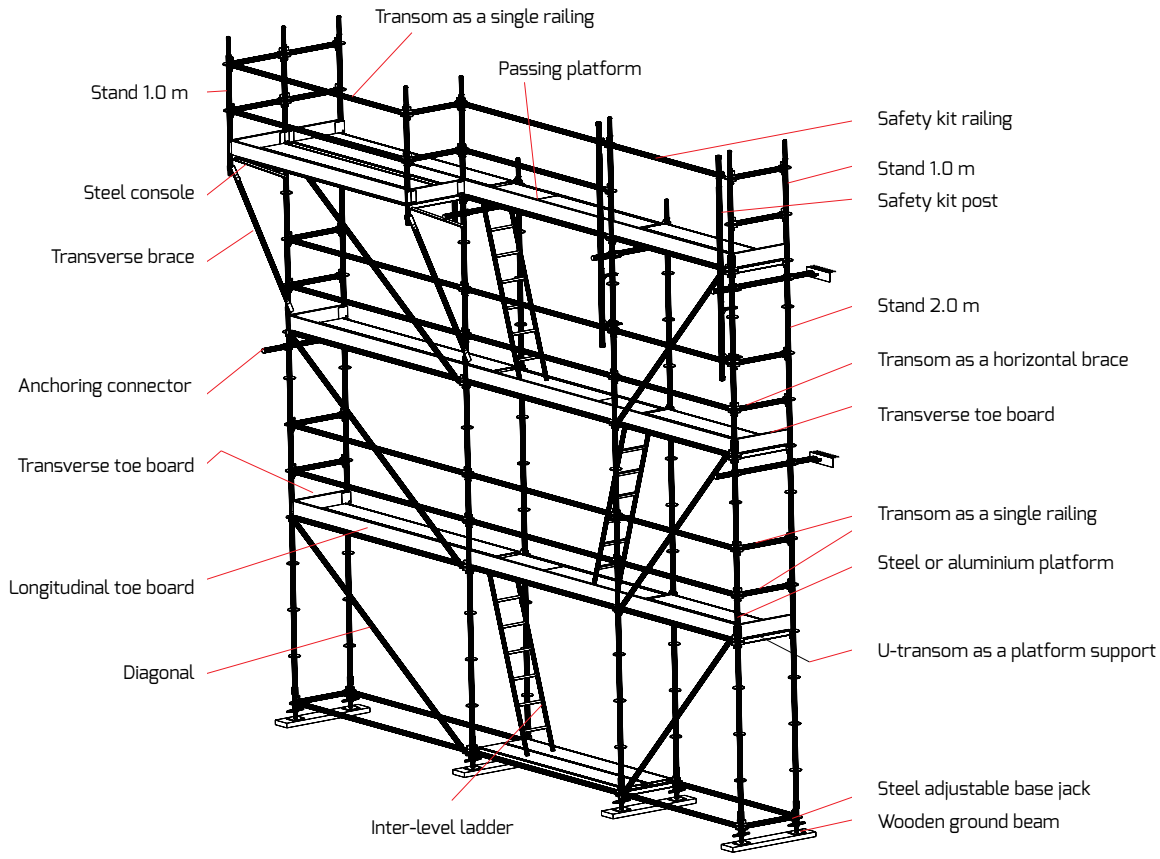

4. Loads

Table 1. Vertical loads of stands ROTAX Plus

Bay length [m]	Maximum load of stand F [kN]			
	Setup 1/2 – brace in every second field		**Setup 1/3** – brace in every third field	
	Internal stands **IS**	External stands **ES**	Internal stands **IS**	External stands **ES**
Level height **H=2.0 m**				
0.73	42.1	36.0	36.9	34.6
1.09	46.1	37.7	43.2	36.8
1.57	46.2	37.7	46.1	37.2
2.07	45.8	37.7	45.3	37.0
2.57	44.9	37.2	44.5	36.7
3.07	44.0	36.7	43.7	36.3
Level height **H=1.0 m**				
0.73	68.4	68.4	66.7	66.7
1.09	69.8	69.4	67.6	67.6
1.57	72.1	69.2	68.0	68.0
2.07	71.9	68.7	69.2	68.1
2.57	71.4	68.3	69.5	67.7
3.07	70.7	67.8	69.2	67.2

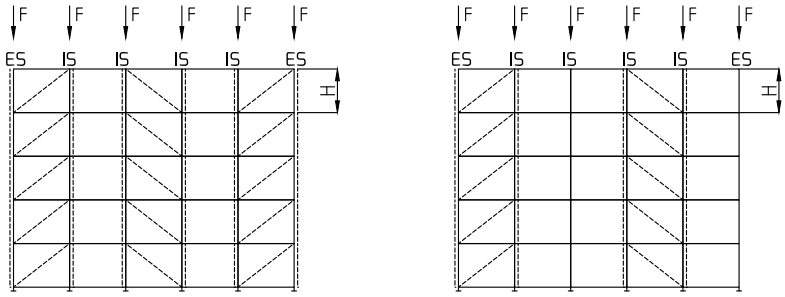

Setup 1/2:
- brace in every second field

Setup 1/3:
- brace in every third field

IS – Internal stand
ES – External stand

Table 2. Permissible ROTAX Plus node load

Bendig moment	$M_{y,R,d}$ = ±63.0 kNcm	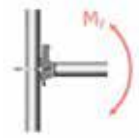	Vertical transverse force	$V_{y,R,d}$ = ±6.2 kN	
Vertical transverse force (single connector)	$V_{z,R,d}$ = ±17.3 kN	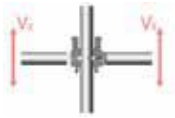	Torque moment	$M_{T,R,d}$ = ±38.7 kNcm	
Vertical transverse force transmitted by rosette	$\Sigma V_{z,R,d}$ = ±48.8 kN				
Bendig moment	$M_{z,R,d}$ = ±14.5 kNcm	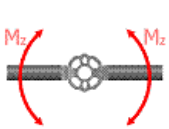	Normal axial force	$N_{R,d}$ = ±20.2 kN	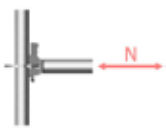

Table 3. Acceptable load of ROTAX Plus brace

	Bay height (m)	Bay length (m)	Normal force NV (kN)
Stretching	2	0.73	16.3
	2	1.09	
	2	1.57	
	2	2.07	
	2	2.57	
	2	3.07	
Compressing	2	0.73	13.87
	2	1.09	11.80
	2	1.57	9.29
	2	2.07	7.39
	2	2.57	6.01
	2	3.07	4.98

Table 4. Bearing capacity of the ROTAX Plus elements

Component name	Length (m)	Load concetrated (P) in the middle of a bay (kN)	Sectional (q) load, equally distributed (kN/m)
O-transom	0.73	7.1	22.5
O-transom	1.09	5.6	11.5
O-transom	1.40	4.0	6.4
O-transom	1.57	3.6	5.2
O-transom	2.07	2.8	3.1
O-transom	2.57	2.3	2.0
O-transom	3.07	2.0	1.4
O-transom reinforced	1.09	11.2	21.8
O-transom double	1.57	15.3	27.6
O-transom double	2.07	11.5	13.9
O-transom double	2.57	7.2	8.0
O-transom double	3.07	6.0	4.3
U-transom	0.73	7.4	23.2
U-transom reinforced	1.09	9.7	19.0
U-transom reinforced	1.40	7.6	11.5
U-transom double	1.57	9.6	16.3
U-transom double	2.07	8.9	9.7
U-transom double	2.57	6.2	5.7
U-transom double	3.07	5.3	4.0
Girder Rotax*	3.07	28.6	14.5
Girder Rotax*	4.14	25.1	10.6
Girder Rotax*	5.14	21.1	8.4
Girder Rotax*	6.14	20.0	6.9

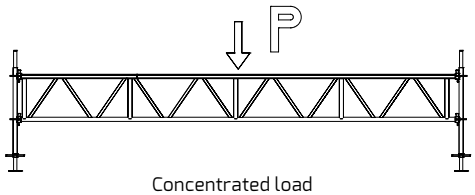

Concentrated load

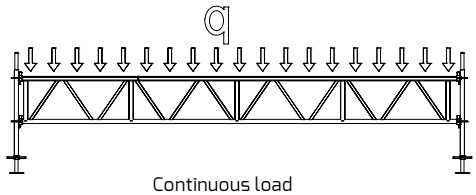

Continuous load

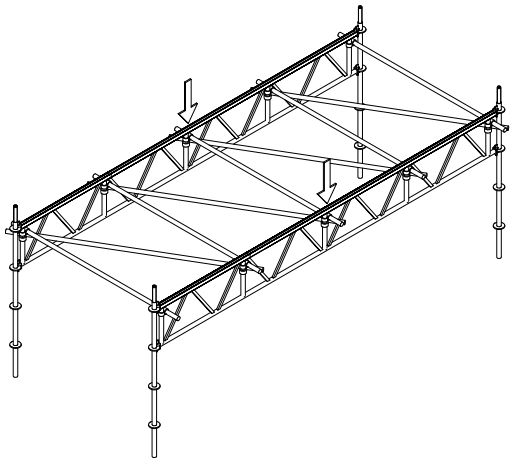

Upper belt stabilization

* Upper belt is stabilized by connecting all vertical posts of the girder just below the upper belt in accordance with diagram.

MODULAR SCAFFOLDING – ROTAX Plus
COMPONENTS

5. List of ROTAX components

1. Initial component

Used to level the lowest scaffolding level and place the vertical stands. Fitted with the hole disk to attach the horizontal transoms. Can be used tolexpand the scaffolding.

Index	Dimensions (m)	Weight (kg)
E371300	0.23	1.59
E371302	0.43	2.50

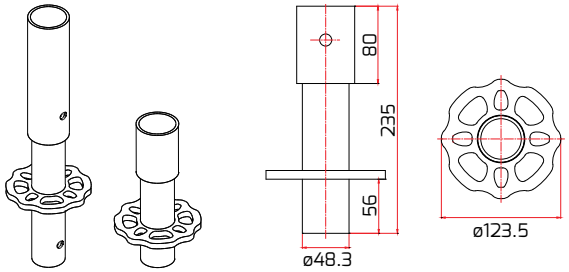

2. Stand

Basic load-bearing scaffolding component. Made of a pipe ø48.3. Fitted with the disks installed every 0.5 m over the entire length to attach up to 8 connectors such as: transoms, braces.

Index	Dimensions (m)	Weight (kg)
E371405	0.5	3.18
E371410	1.0	5.45
E371415	1.5	7.72
E371420	2.0	10.00
E371425	2.5	12.20
E371430	3.0	14.54
E371435	3.5	16.78
E371440	4.0	19.00

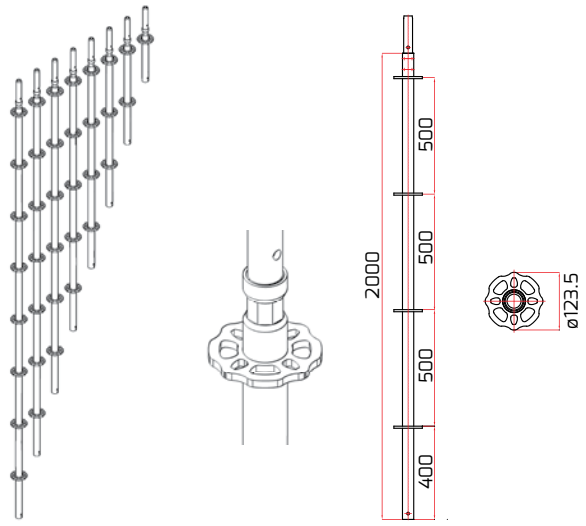

3. Stand without a pin connector

Used in the stage and platform structures (last level).

Index	Dimensions (m)	Weight (kg)
E371505	0.5	2.27
E371510	1.0	4.54
E371515	1.5	6.81
E371520	2.0	9.07
E371525	2.5	11.30
E371530	3.0	13.60
E371540	4.0	18.15

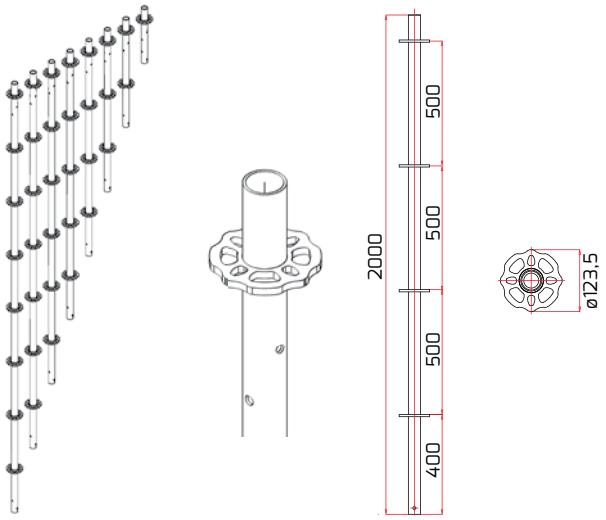

4. Pin connector

Used to connect the stands without a pin connector. Works with the M12 screw and nut.

Index	Dimensions (m)	Weight (kg)
E371600	0.52	1.77

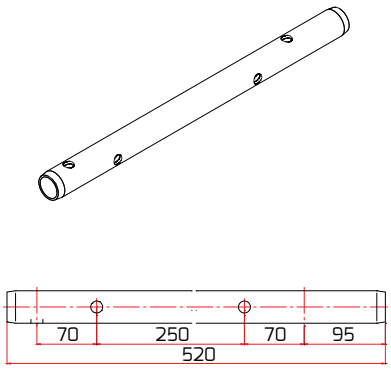

5. Screw M12 x 60 with nut

Connecting element.

Index	Dimensions (m)	Weight (kg)
SRUX26000	12x60	0.04
NAK120000	–	0.01

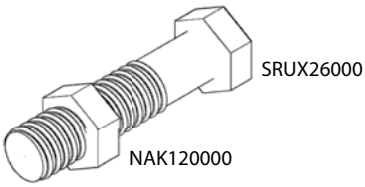

6. Stand with screwed connector

Used to erect suspended and supporting scaffolding. The screws allow you to connect the scaffolding.

Index	Dimensions (m)	Weight (kg)
E371605	0.55	4.43
E371610	1.0	6.71
E371615	1.5	8.98
E371620	2.0	11.20
E371625	2.5	13.50
E371630	3.0	15.70
E371635	3.5	18.00
E371640	4.0	20.30

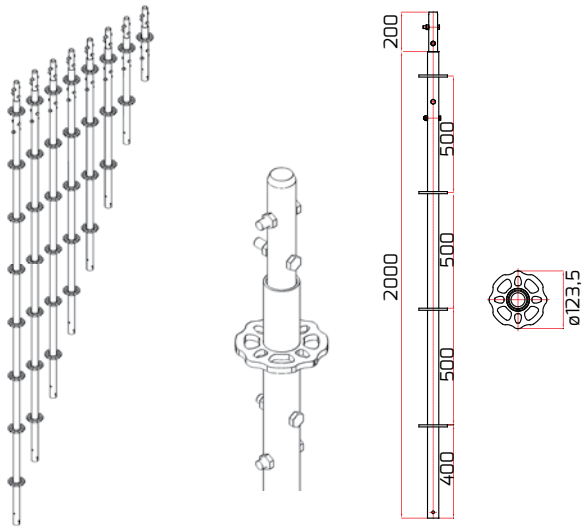

7. Disk Connector

Allows you to build an additional system node on the ROTAX system stands in any position. You can attach up to 6 additional parts such as: a transom, brace or console to the disk connector.

Index	Dimensions (m)	Weight (kg)
E371200	–	1.15

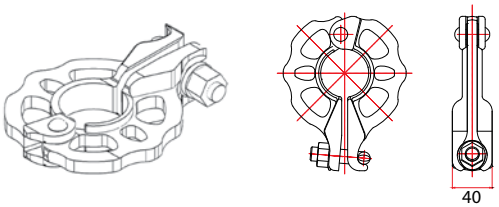

see p. 45

8. Horizontal Transom

Stiffens the scaffolding structure, used as protection railings.

Index	Dimensions (m)	Weight (kg)
E371804	0.39	2.06
E371807	0.73	3.29
E371810	1.09	4.56
E371814	1.40	5.68
E371815	1.57	5.56
E371820	2.07	7.08
E371825	2.57	9.07
E371830	3.07	10.10

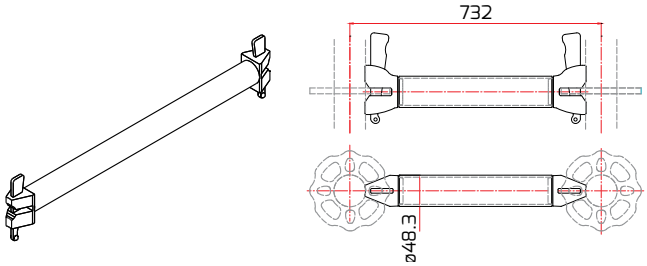

see p. 7

9. Transverse U-transom

A U-transom to suspend platforms with the u-section catch.

Index	Dimensions (m)	Weight (kg)
E372404	0.45	2.22
E372407	0.73	3.16

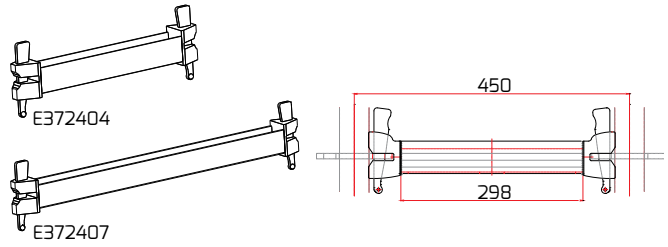

see p. 7

10. Reinforced U-transom

A reinforced U-transom is used to suspend platforms with the u-section catch.

Index	Dimensions (m)	Weight (kg)
E372410	1.09	6.21
E372414*	1.4	7.94

* made to order

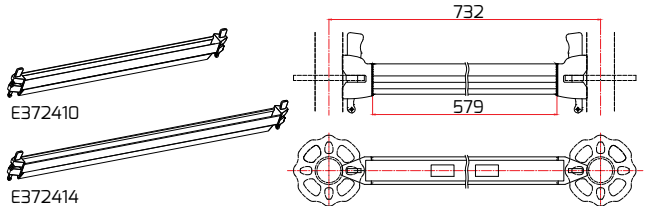

see p. 7

11. Double U-transom

A transom with the U-section, adequately reinforced to install the platforms with the higher stand spacing. Used when building platforms.

Index	Dimensions (m)	Weight (kg)
E373515	1.57	9.75
E373520	2.07	12.80
E373525	2.57	15.90
E373530	3.07	18.90

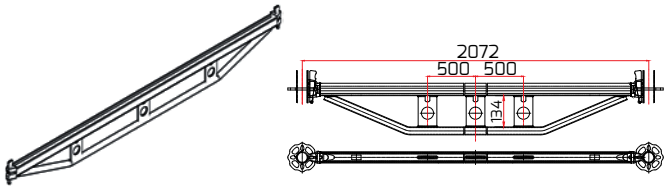

see p. 7

12. Platform Protection

Protects the platform from falling out of the U-transom.

Index	Dimensions (m)	Weight (kg)
E374503	0.36	0.61
E374507	0.73	1.33
E374510	1.09	1.96
E374514	1.40	2.74
E374515	1.57	3.00
E374520	2.07	4.00
E374525	2.57	4.93
E 374530	3.07	5.87

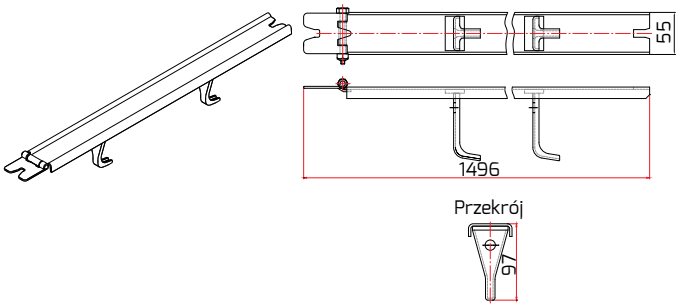

see p. 7

13. Reinforced O-transom

Reinforced transoms are used to suspend platforms with the O-section catch.

Index	Dimensions (m)	Weight (kg)
E372210	1.09	6.46

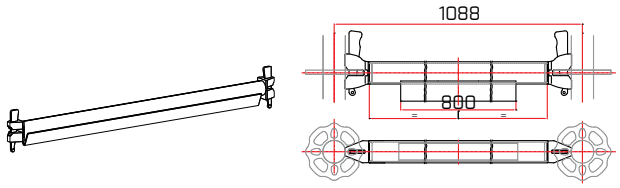

see p. 7

14. Double O-transom

A transom with the O-section, adequately reinforced to install the platforms with the higher stand spacing. Used when building platforms.

Index	Dimensions (m)	Weight (kg)
E373615	1.57	10.10
E373620	2.07	13.30
E373625	2.57	16.50
E373630	3.07	19.70

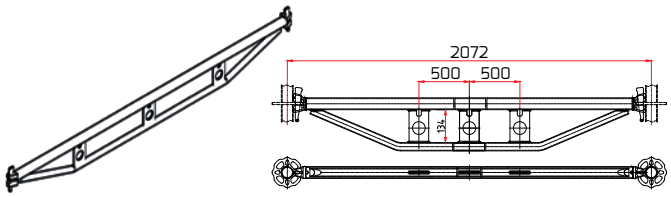

see p. 7

Works at the airport building facade

15. Vertical Brace

Fitted on both ends with moving heads with a fixed wedge driven into the disk hole. Provided for different scaffolding bay length. Stiffens the scaffolding structure.

Index	Dimensions (m)	Weight (kg)
E373107	0.73x2.0	7.88
E373110	1.09x2.0	8.26
E373114	1.40x2.0	8.69
E373115	1.57x2.0	8.97
E373120	2.07x2.0	9.92
E373125	2.57x2.0	10.99
E373130	3.07x2.0	12.10
E373207	0.73x1.0	5.15
E373215	1.57x1.0	6.86
E373220	2.07x1.0	8.12
E373221	2.07x0.5	7.59
E373225	2.57x1.0	9.46
E373230	3.07x1.0	10.83

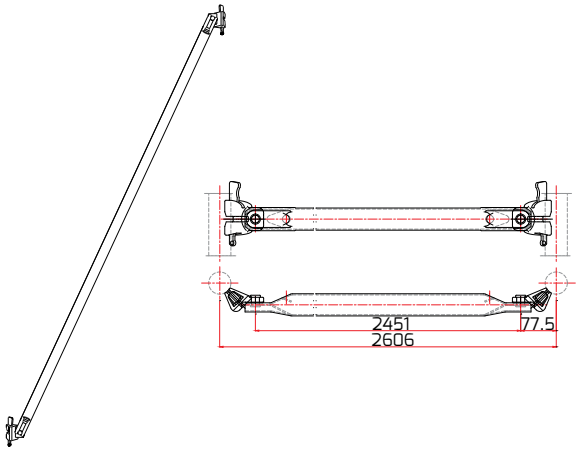

16. Horizontal Brace

Stiffens the scaffolding horizontally, in the bays with no platform installed and with platform planks.

Index	Dimensions (m)	Weight (kg)
E373320	2.07x1.09	6.53
E373325	2.57x1.09	7.75
E373330	3.07x1.09	10.80
E373410	2.09x1.09	4.20
E373425	2.57x0.73	7.45
E373430	3.07x0.73	8.75

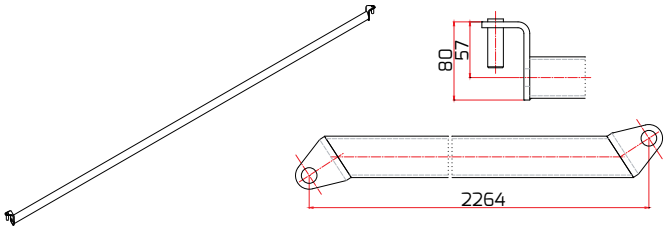

17. Steel U – platform

A perforated platform with the anti-slip surface and the U-section handles. A standard platform for scaffolding with the frame 0.73 m wide (2 platforms) or 1.09 m wide (3 platforms) and an expanding platforms, installed on the console.

Index	Dimensions (m)	Weight (kg)
E491307	0.32x0.73	5.89
E491310	0.32x1.09	8.19
E491314	0.32x1.40	10.31
E491315	0.32x1.57	11.31
E491320	0.32x2.07	14.55
E491325	0.32x2.57	17.77
E491330	0.32x3.07	21.00

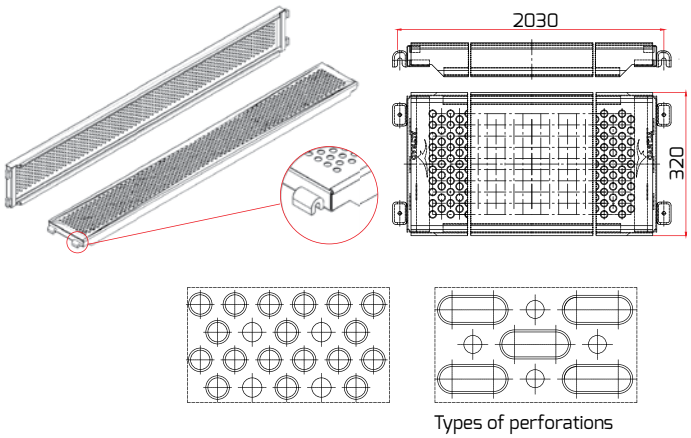

Types of perforations

see p. 45

18. Steel Platform with cross-beam

A steel perforated platform with ergonomic cross-beams which are the additional handle for the fitter. Perfect when the scaffolding is often relocated.

Index	Dimensions (m)	Weight (kg)
E491415	0.32x1.57	12.04
E491420	0.32x2.07	15.74
E491425	0.32x2.57	19.10
E491430	0.32x3.07	22.56

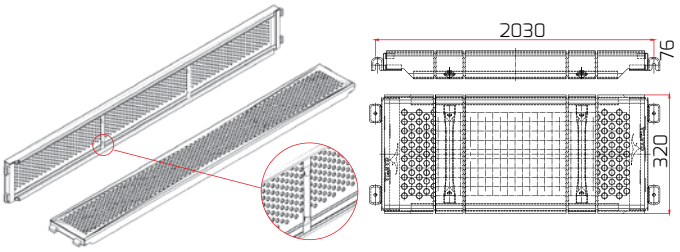

see p. 45

19. Steel ECO platform with cross-beam

A light perforated platform with the anti-slip surface and the U-section handles. ECO platforms are lighter and cheaper than the conventional steel platforms and they maintain the same strength characteristics.

Index	Dimensions (m)	Weight (kg)
E491625	0.32x2.57	16.15
E491630	0.32x3.07	18.85

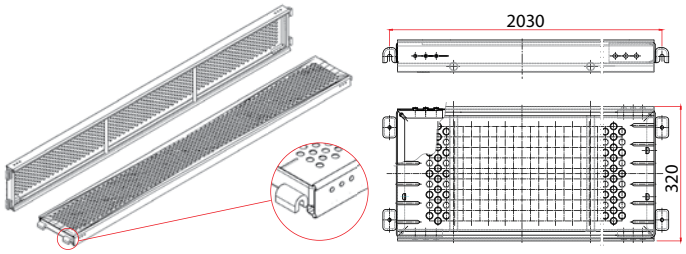

see p. 45

20. Steel O-platform

A perforated, anti-slip platform finished with the handles to install the platform on the O-transom.

Index	Dimensions (m)	Weight (kg)
E495607	0.32x0.73	6.72
E495610	0.32x1.09	9.17
E495614	0.32x1.40	11.19
E495615	0.32x1.57	12.47
E495620	0.32x2.07	15.96
E495625	0.32x2.57	19.32
E495630	0.32x3.07	22.76

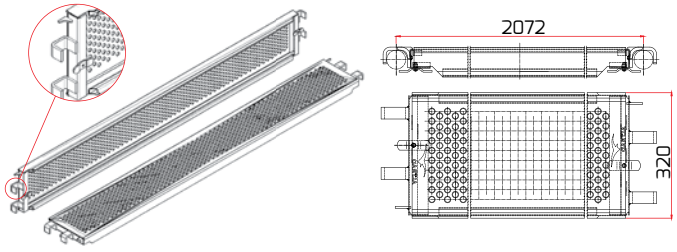

see p. 45

21. Steel O-platform with cross-beam

A perforated, anti-slip platform finished with the handles to install the platform on the O-transom, Ergonomic cross-beams facilitate installation.

Index	Dimensions (m)	Weight (kg)
E495507	0.32x0.73	6.72
E495510	0.32x1.09	9.38
E495515	0.32x1.57	12.68
E495520	0.32x2.07	16.39
E495525	0.32x2.57	19.74
E495530	0.32x3.07	23.18

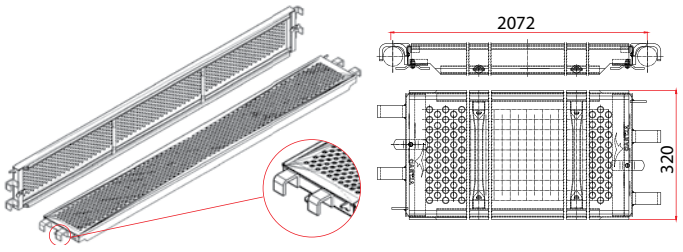

see p. 45

22. Steel intermediate U-platform

A platform with the U-section catch, perforated, anti-slip.

Index	Dimensions (m)	Weight (kg)
E491807	0.19x0.73	4.63
E491810	0.19x1.09	6.57
E491815	0.19x1.57	9.29
E491820	0.19x2.07	11.92
E491825	0.19x2.57	14.64
E491830	0.19x3.07	17.37

* made to order

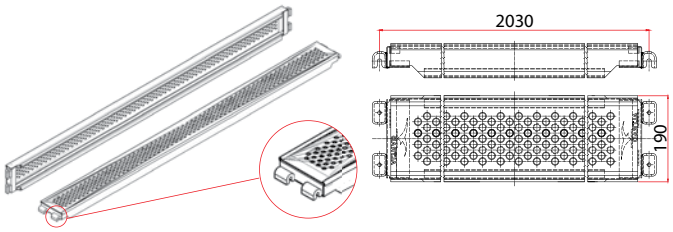

see p. 45

23. Steel intermediate O-platform

A platform with the O-section catch, perforated, anti-slip.

Index	Dimensions (m)	Weight (kg)
E491707	0.19x0.73	5.05
E491710	0.19x1.09	7.00
E491715	0.19x1.57	9.73
E491720	0.19x2.07	12.36
E491725	0.19x2.57	15.08
E491730	0.19x3.07	17.80

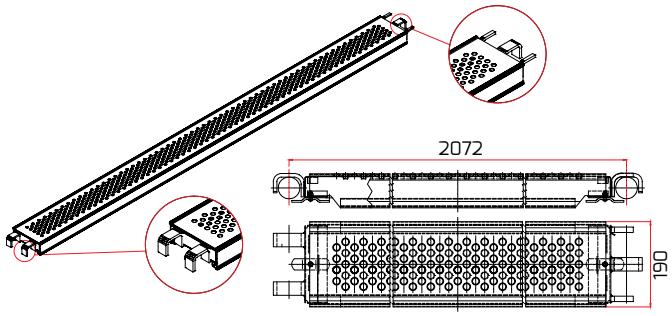

24. Complete aluminium and plywood Platform PLUS

An aluminium and plywood platform with the anti-slip surface.

Index	Dimensions (m)	Weight (kg)
E491907	0.61x0.73	6.07
E491910	0.61x1.09	8.75
E491915	0.61x1.57	11.90
E491920	0.61x2.07	15.53
E491925	0.61x2.57	18.80
E491930	0.61x3.07	24.06

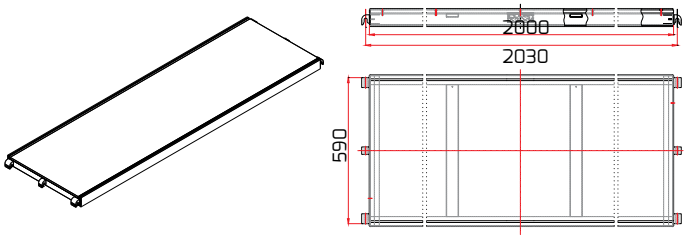

see p. 45

Zakłady Azotowe in Puławy

25. Ladder for platforms

A replacement aluminium ladder for the aluminium platform with the hatch (E4923xx) complete with the pin and the washer. Ladder no. E492600 also matches the platforms

Index	Dimensions (m)	Weight (kg)
E492601	2.45x0.40	4.60

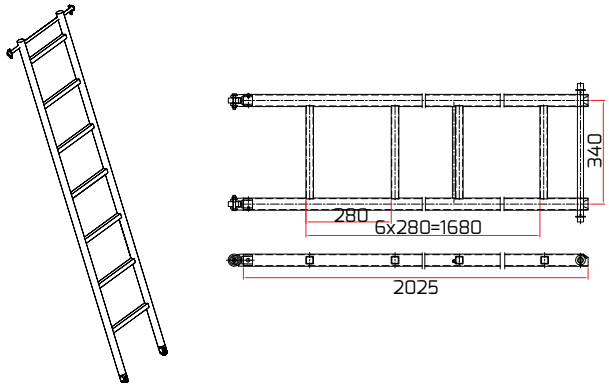

26. Aluminium Ladder for passing platforms

A service component, does not include any pin or washer.

Index	Dimensions (m)	Weight (kg)
E492600	2.45x0.40	4.25

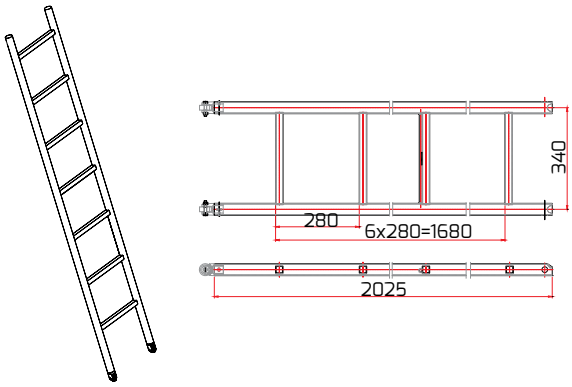

27. Pin

Fastens the ladder to the platform aluminium frame. A service component.

Index	Dimensions (m)	Weight (kg)
E492603	–	0.33

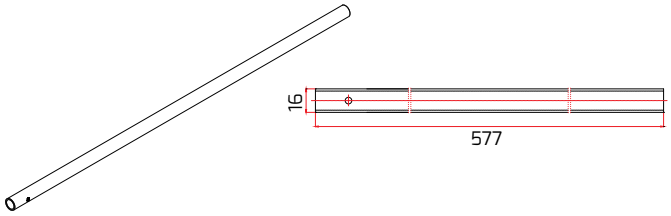

28. Steel inter-level Ladder

A ladder with the metal sheet steps with the anti-slip perforation. Used with platforms no. E4925xx.

Index	Dimensions (m)	Weight (kg)
E511600	2.14x0.34	11.68

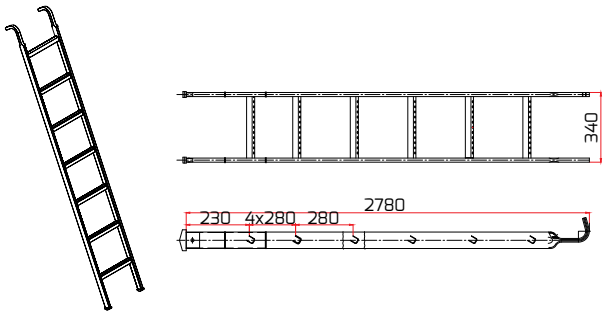

29. Passing Platform Plus without ladder

A light passing platform without the ladder (used with the inter-level ladder E511600).

Index	Dimensions (m)	Weight (kg)
E492020	0.61x2.07	15.90
E492030	0.61x3.07	24.30

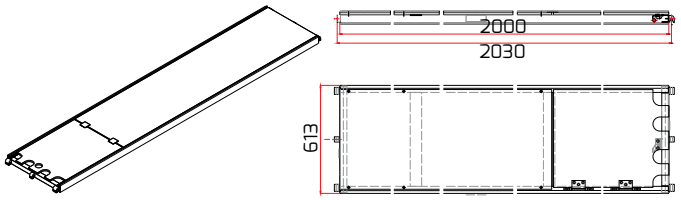

see p. 45

30. Passing Platform Plus with ladder

Used for forming circulation paths, fitted with the aluminium ladder.

Index	Dimensions (m)	Weight (kg)
E492125	0.61x2.57	23.80
E492130	0.61x3.07	29.10

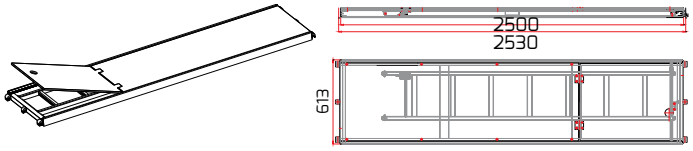

31. Steel additional (moveable) Platform

Used to fill space between two scaffolds (load capacity: 2 kN).

Index	Dimensions (m)	Weight (kg)
E494310	0.3x1.0	5.18
E494315	0.3x1.5	7.47
E494320	0.3x2.0	9.74
E494325	0.3x2.5	11.94

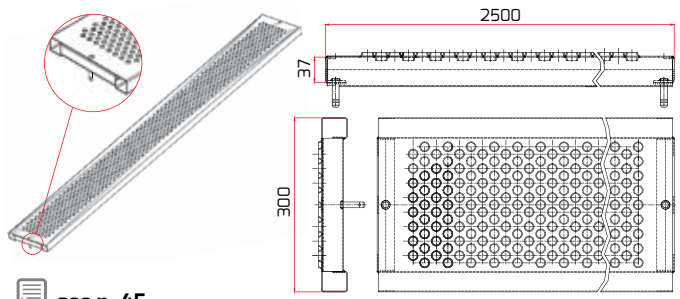

see p. 45

32. Additional Platform

Used to fill space between two scaffolds (load capacity: 2 kN).

Index	Dimensions (m)	Weight (kg)
E494407	0.19x0.7	2.88
E494410	0.19x1.0	3.96
E494415	0.19x1.5	5.74
E494420	0.19x2.0	7.53
E494425	0.19x2.5	9.31
E494430	0.19x3.0	11.10

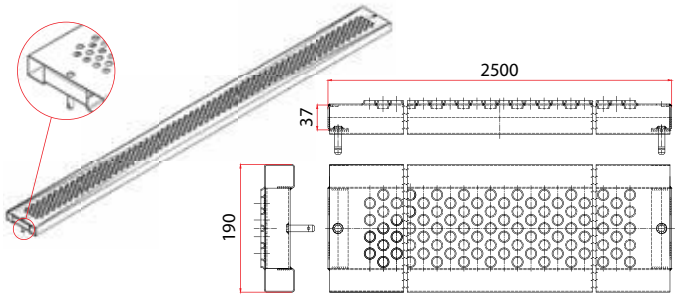

see p. 45

33. Special U-transom

A component suspended between the platforms with the wedge clamps. Used when erecting the structures of irregular shapes.

Index	Dimensions (m)	Weight (kg)
E372503	0.33	3.27
E372507	0.65	4.29
E372510	0.97	7.11

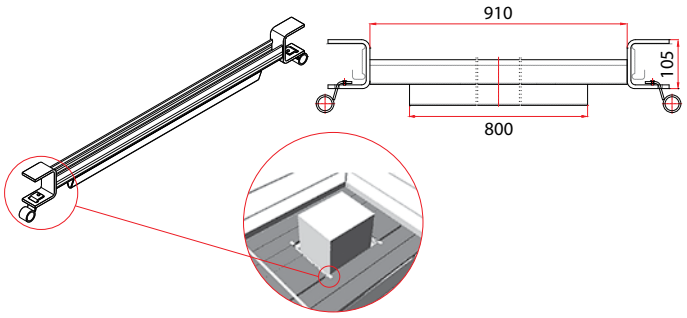

34. Overlay Transom

A component installed on the pipes/o-transoms, used to shorten bays.

Index	Dimensions (m)	Weight (kg)
E372603	0.39	2.68
E372607	0.73	4.00
E372610	1.09	7.10

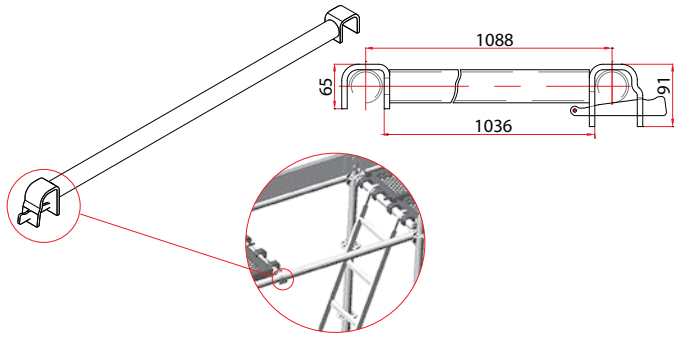

35. Aluminium stage Platform

Aluminium and plywood platforms to build stage platforms based on the ROTAX system. Installed on the U-section.

Index	Dimensions (m)	Weight (kg)
E499115	0.5x1.57	17.90
E499120	0.5x2.07	23.10
E499125	0.5x2.57	28.20
E499130	0.5x3.07	35.50
E499215	0.57x1.57	19.50
E499225	0.57x2.57	30.90

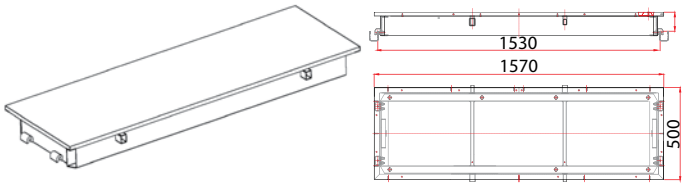

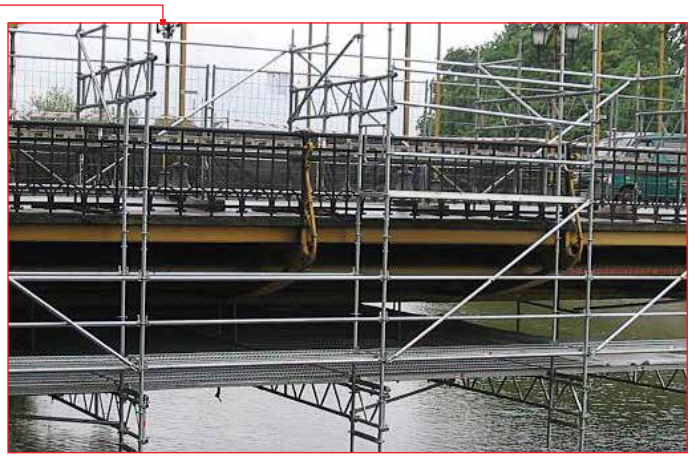

The Zwierzyniecki Bridge in Wrocław

36. Adjustable corner Platform 45-90°

Used to connect corners of two scaffolds.

Index	Dimensions (m)	Weight (kg)
E493700	–	19.08

* made to order

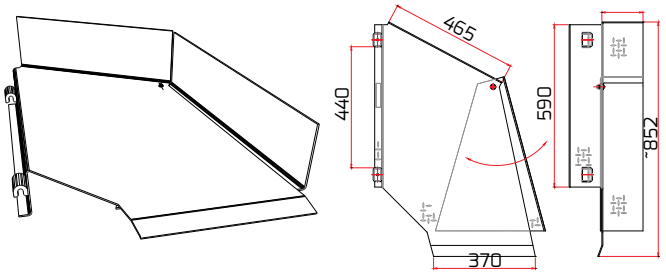

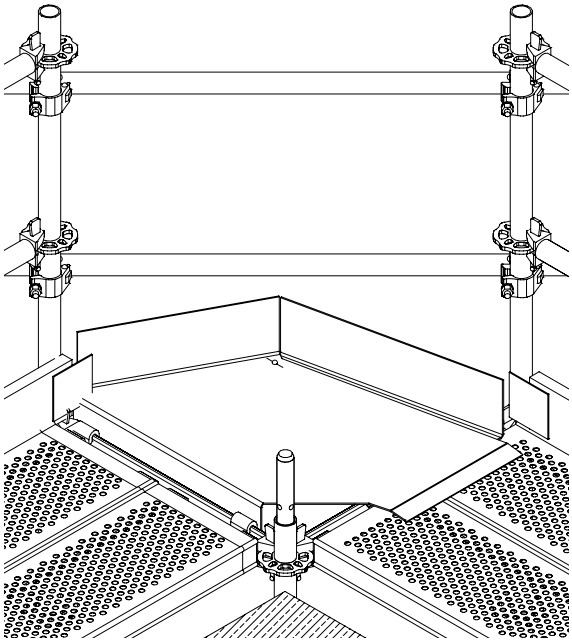

Use of the corner adjustable platform 45-90°

Ostrołęka Power Plant

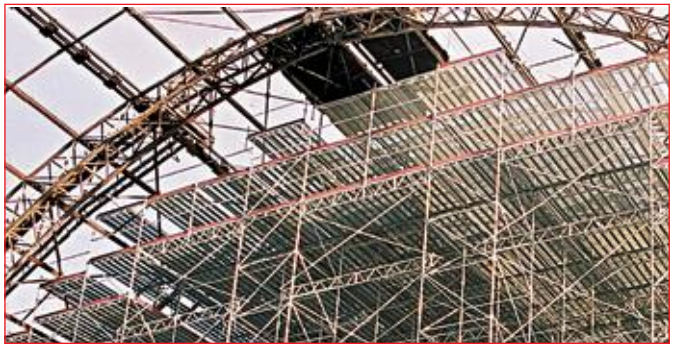

Kiev Railway Station – Moscow

37. Wooden Toe board ROTAX

A safety component. Made of wood. Suspended on the handles between the vertical stand pipe and the U-transom wedge. Installed at the platform height, protects against falling from height.

Index	Dimensions (m)	Weight (kg)
E375107	0.15x0.73	1.97
E375110	0.15x1.09	2.85
E375115	0.15x1.57	4.05
E375120	0.15x2.07	5.29
E375125	0.15x2.57	6.53
E375130	0.15x3.07	7.76

* made to order – height: 0.20 m

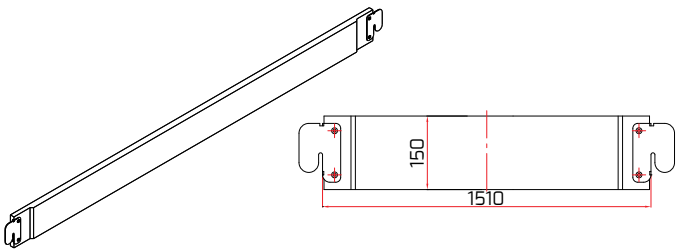

38. Steel Toe board

A safety component. Made of steel. Suspended on the handles between the vertical stand pipe and the U-transom wedge. Installed at the platform height, protects employees against falling from height.

Index	Dimensions (m)	Weight (kg)
E375607	0.15x0.73	2.26
E375610	0.15x1.09	3.18
E375615	0.15x1.57	4.43
E375620	0.15x2.07	5.73
E375625	0.15x2.57	7.02
E375630	0.15x3.07	8.32

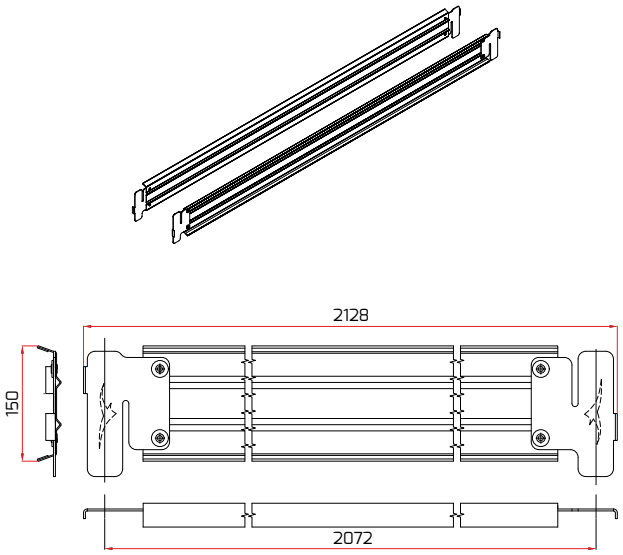

39. Standard steel base Jack

Used to properly position the scaffolding without height adjustment. It is a foot with the base of 150 x 150 mm and the pipe pin ø36 mm.

Index	Dimensions (m)	Weight (kg)
E511200	0.15	1.38

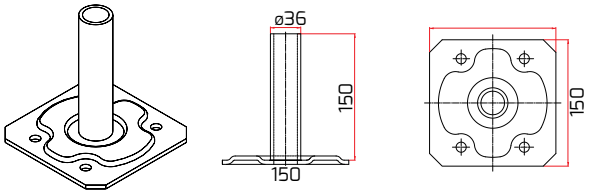

40. Steel, adjustable Base jack. Adjustable base jack with nut

Base jacks of various height are used to compensate ground faults. They include a base of 150 x 150 mm with the threaded pipe pin and the socket nut for the pipe. The clamped thread protects the nut against unscrewing (there must be at least 15 cm of the base jack threaded pin in the frame) and loss. A base 40 cm high with the max. unscrewing length of 20 cm, 60 cm with the max. unscrewing length of 40 cm or 80 cm high with the max. unscrewing length of 60 cm. Permissible base jack load: up to 3 t.

Index	Dimensions (m)	Weight (kg)
E511204	0.40	3.39
E511206	0.60	4.28
E511208	0.80	5.20
E511313	1.50	9.52
E511506	0.60	4.20

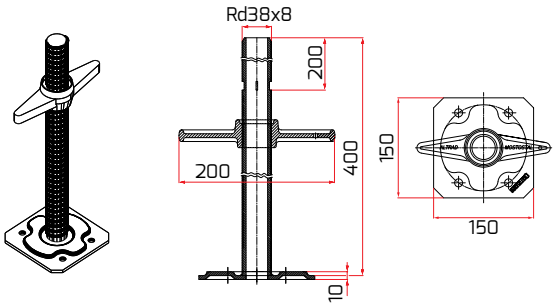

see p. 47

41. Steel adjustable tilted base Jack

With the threaded pipe pin installed and tilting in the base of 150 x 150 mm, with the nut and clamp for pipe of ø48.3 mm. Used to position the frame on the tilted surface.

Index	Dimensions (m)	Weight (kg)
E511408	0.8	7.81

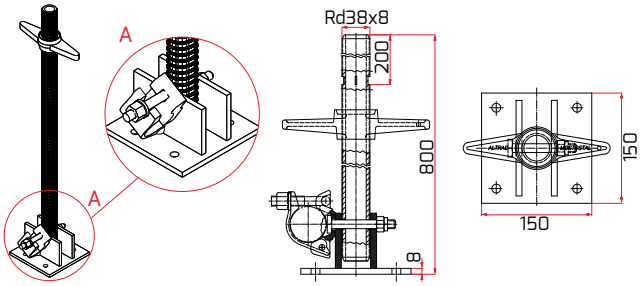

42. Threaded Cross Head

Used to support the ceiling formwork. Adjustment range: 350 mm.

Index	Dimensions (m)	Weight (kg)
E642210	–	10.10

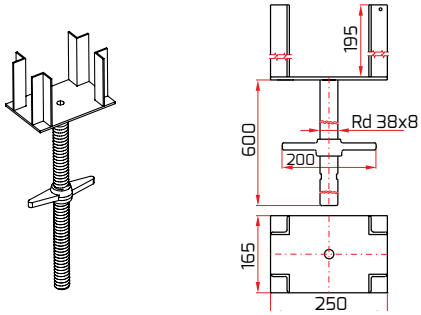

43. Steel Console Rotax-U

Used to expand the scaffolding by 0.36 m or 0.73 m, or 1.09 m. Fixed to the stand with the wedge connector.

Index	Dimensions (m)	Weight (kg)
E374103	0.36	3.90
E374107	0.73	6.42
E374110	1.09	13.40

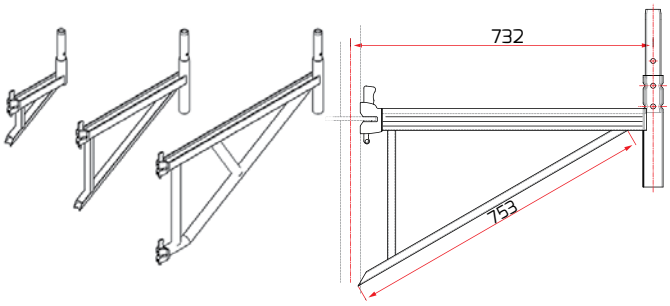

44. Steel Console Rotax-O

Used to expand the scaffolding for the O-section platforms.

Index	Dimensions (m)	Weight (kg)
E374203	0.36	3.98
E374207	0.73	6.78

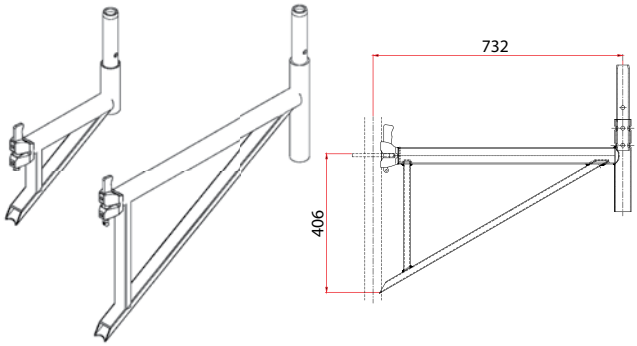

45. Handle of a curb

Element ensuring correct installation of curbs set on brackets.

Index	Wymiary (mm)	Weight (kg)
E375900	–	0.78

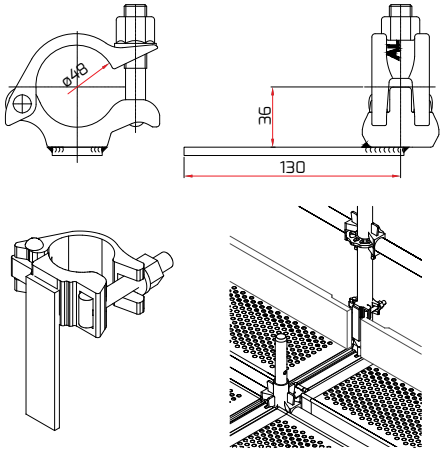

46. Adjustable Console

An adjustable console for the platforms with the O-section. Up to 697 mm wide (2 platforms, 0.32).

Index	Dimensions (m)	Weight (kg)
E374100	0.36	4.43

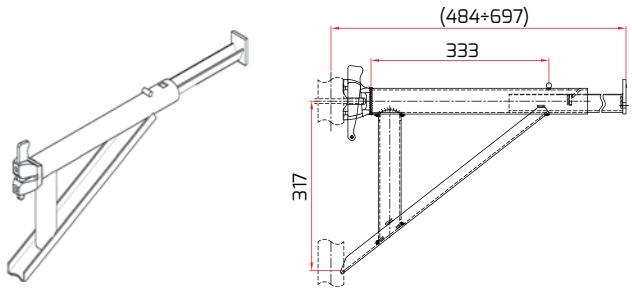

47. Vertical brace Console

Console brace, vertical E374107, E374207.

Index	Dimensions (m)	Weight (kg)
E372907	0.7	7.62

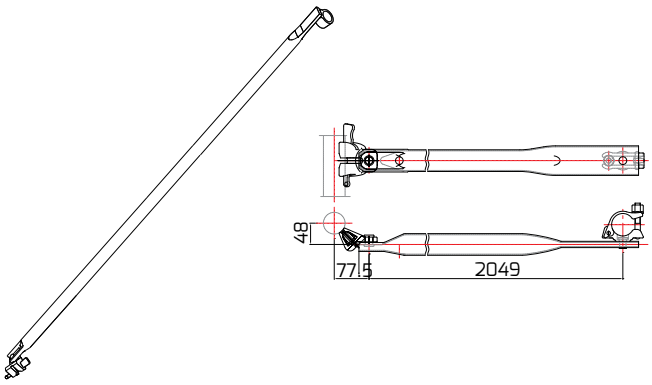

48. Diagonal

Used to support to the steel 0,73 m or 1,09 m console both with "U" and "O" profile. Fitted with the rotating connectors.

Index	Dimensions (m)	Weight (kg)
E285179	1.75	4.99
E285119	1.95	5.52

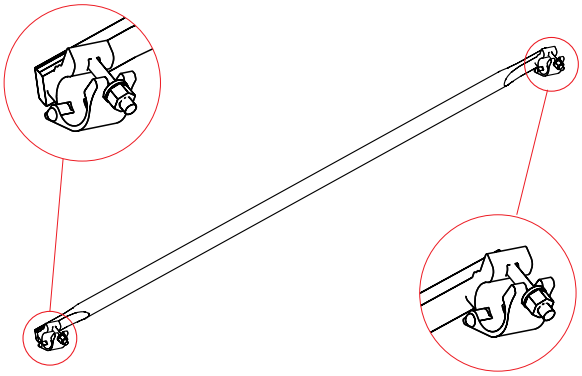

49. Girder with U-section

A lattice girder with the additional U-section to suspend serial platforms between the girders. Used when building the platforms.

Index	Dimensions (m)	Weight (kg)
E376720	2.07x0.50	23.78
E376725	2.57x0.50	28.70
E376730	3.07x0.50	33.70
E376741	4.14x0.50	42.86
E376751	5.14x0.50	54.90
E376761	6.14x0.50	64.80

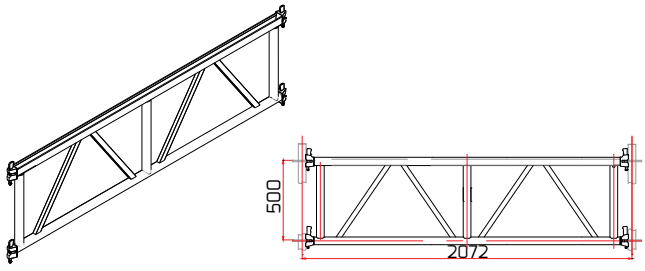

see p. 7

50. Girder with O-section

A lattice girder to attach the platforms with the O-section catches. Used when building the platforms.

Index	Dimensions (m)	Weight (kg)
E376851	5.14	56.40

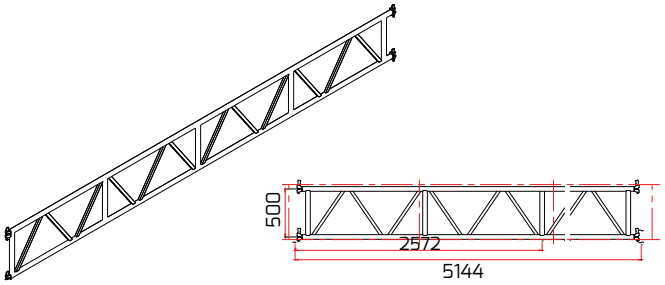

see p. 7

51. Steel lattice Girder

Used to build passages under the scaffolding, spans over the structural building elements and all platforms. The girder is connected to the vertical frame with 4 standard connectors. Made of pipes of ø48.3 x 3.2 mm.

Index	Dimensions (m)	Weight (kg)
E503330	0.40x3.00	29.22
E503332	0.40x3.24	31.14
E503340	0.40x4.00	39.28
E503342	0.40x4.24	39.67
E503352	0.40x5.24	48.55
E503360	0.40x6.00	57.42
E503362	0.40x6.24	58.03
E503230	0.50x3.24	36.40
E503240	0.50x4.24	45.60
E503250	0.50x5.24	54.80
E503260	0.50x6.24	61.12

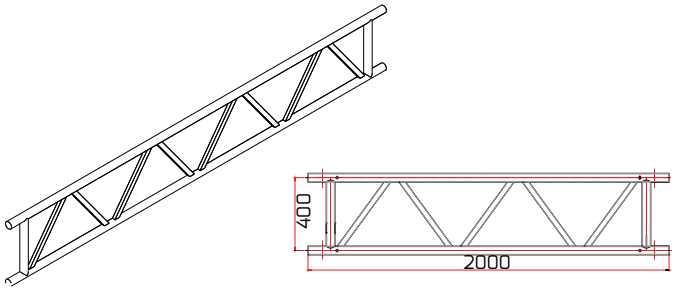

see p. 44

52. Aluminium lattice Girder

An alternative to the steel lattice girder, features lower weight. Its advantage is a much easier installation and removal due to lower weight.

Index	Dimensions (m)	Weight (kg)
E501230	0.40x3.00	12.70
E501240	0.40x4.00	17.00
E501252	0.40x5.24	20.96
E501260	0.40x6.00	24.70
E501262	0.40x6.24	25.12
E501280	0.40x8.00	32.40
E501330	0.50x3.24	14.97
E501340	0.50x4.24	18.79
E501350	0.50x5.24	22.60
E501360	0.50x6.24	26.43
E501380	0.50x8.24	34.03

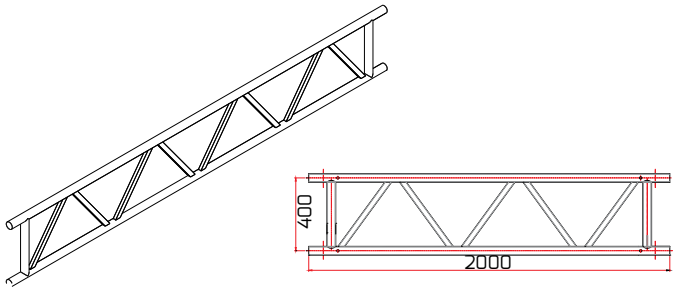

see p. 44

53. Platforms Aluminium Cross – beam

It is a u-section for 2, 3, 4, 5, 6 platforms 0.32 m wide and for the suitable girders 3 m, 4 m, 5 m and 6 m long. Fixed to the upper girder belt with the connector. Used when building the platforms.

Index	Dimensions (m)	Weight (kg)
E501006	0.60	2.70
E501009	0.90	3.30
E501012	1.20	3.80
E501016	1.60	5.20
E501019	1.90	5.80
E501030	3.00	8.50
E501040	4.00	10.20
E501050	5.00	12.70
E501060	6.00	15.20

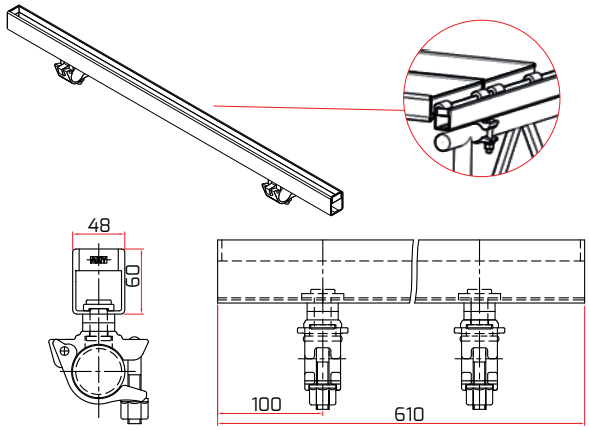

54. Roof Lattice Girder

A component to connect to girders systematically when erecting the roofs of halls and tents.

Index	Dimensions (m)	Weight (kg)
E502140	0.40	8.20

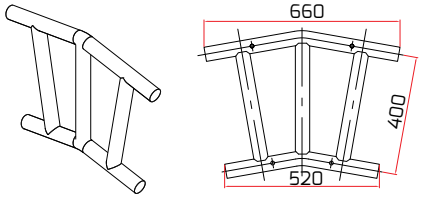

55. Girder console

Connects the frame and the girder. Provides an inclination angle of 10° for hall or tent roof slope.

Index	Dimensions (m)	Weight (kg)
E503507	0.73	5.99

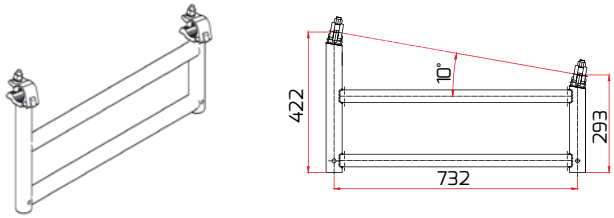

56. Girder pipe Connector

Allows you to connect the lattice girders o various length to provide a span 6 – 12 m long.

Index	Dimensions (m)	Weight (kg)
E502000	0.44	2.20

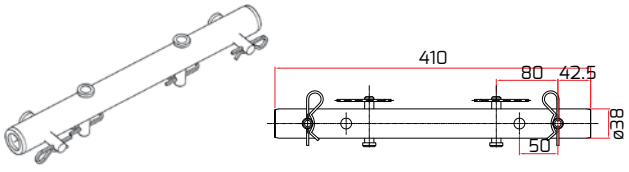

57. Pipe connector, for girder

Fixed to the U-section, installed on the girders to change the bay length.

Index	Dimensions (m)	Weight (kg)
E376700	–	1.87

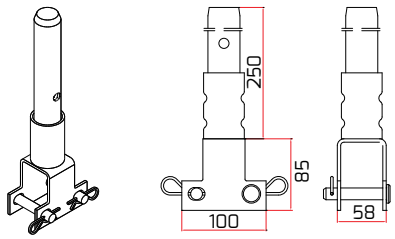

58. Roof ending beam

Element intended for system end of beams 0,4xL.
It plays the role of an eaves.

Index	Dimensions (m)	Weight (kg)
E501940	0.4x0.62	5.59

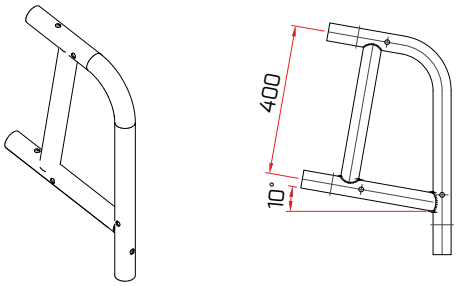

59. Pipe connector with connection

Fixed to the O-section, installed on the girders to change the bay length.

Index	Dimensions (m)	Weight (kg)
E581701	–	1.60

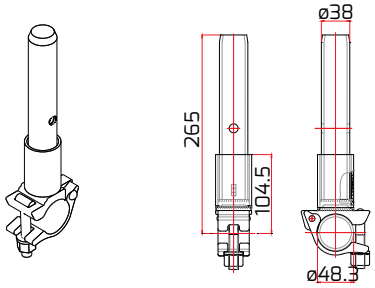

60. Aluminium Platform with O-section catches

Allows you to build ceiling, communication and inspection platforms.

Index	Dimensions (m)	Weight (kg)
E490940	4.0	33.64
E490960	6.0	48.13

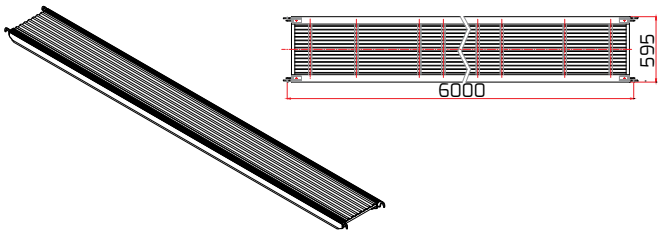

61. Aluminium Platform

Allows you to build ceiling, communication and inspection platforms.

Index	Dimensions (m)	Weight (kg)
E491042	4.25x0.59	32.70
E491052	5.20x0.59	39.00
E491061	6.15x0.59	46.00
E491071	7.10x0.59	52.50

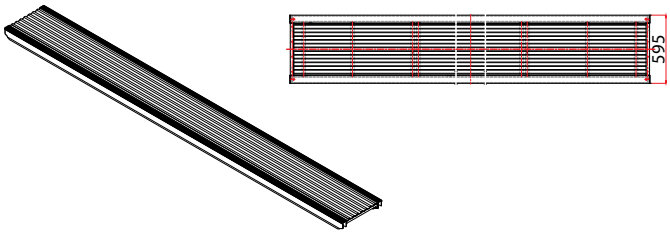

62. Aluminium Post for railing. Railing clamp. Clamp for aluminium platform

Components used with the aluminium platform. The aluminium post for the railing and the railing clamp as well as the pipe of ø48.3 mm are used to install the protection railings on the aluminium platforms. The clamp for the aluminium platform is used to clamp the adjacent platforms to increase to platform or circulation path width.

Index	Dimensions (m)	Weight (kg)
E491001	–	2.50
E491002	–	0.30
E491003	–	0.30

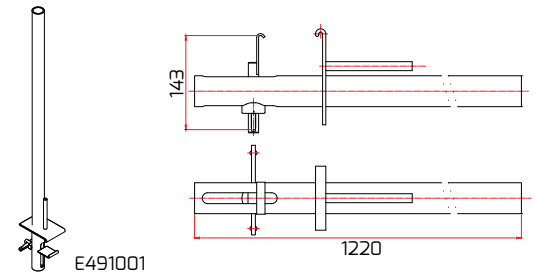

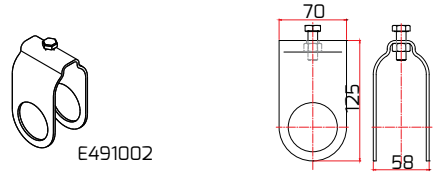

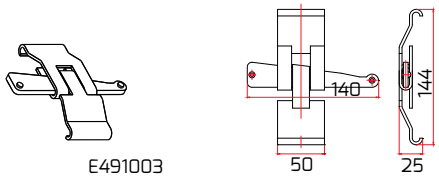

63. Aluminium Stairs

Ensure comfortable access to the scaffolding and material handling.

Index	Dimensions (m)	Weight (kg)
E286225	0.64x2.57	25.10
E286230	0.64x3.07	29.90

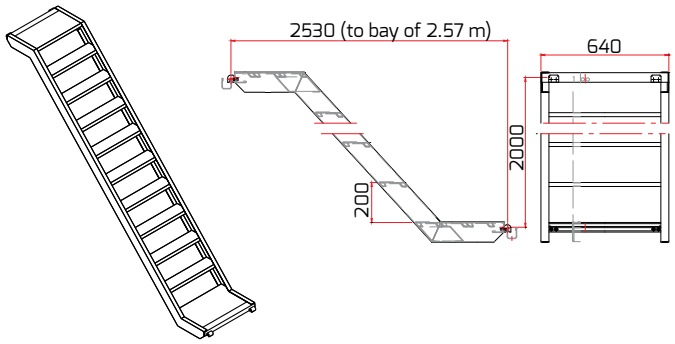

64. External Railing for stairs

Ensures safe access to and exit from the modular scaffolding staircase.

Index	Dimensions (m)	Weight (kg)
E374925	2.57	18.60
E374930	3.07	20.60

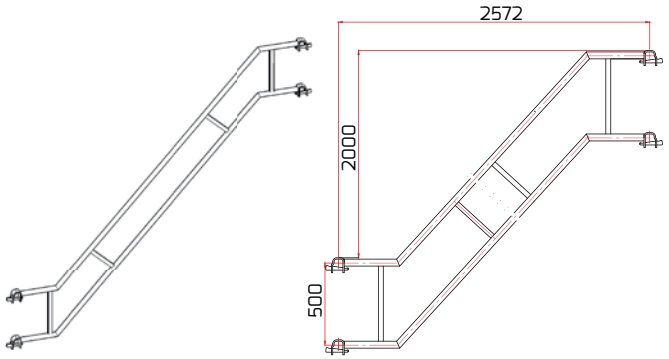

65. Internal Railing for stairs

Ensures safe access to and exit from the scaffolding.

Index	Dimensions (m)	Weight (kg)
E286300	–	11.97

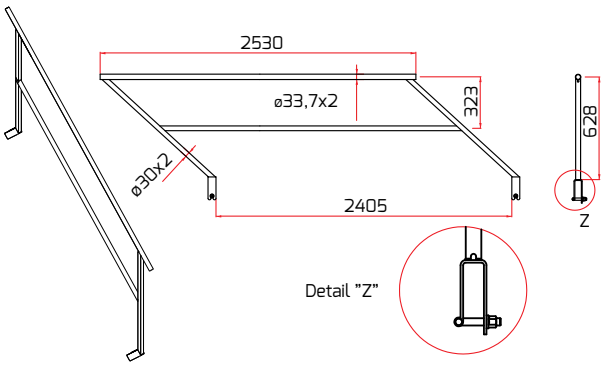

66. Handle for railing

Ensures safe access to and exit from the scaffolding.

Index	Dimensions (m)	Weight (kg)
E374800	–	0.89

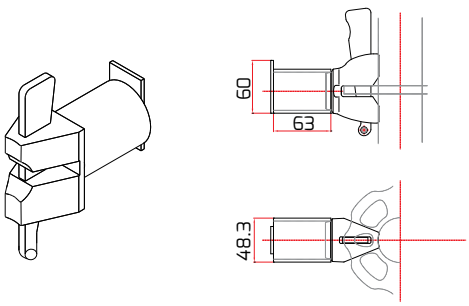

67. Load-bearing beams for stairs

Used to construct the temporary stairs structure with the systemic dimensions. Steps are made of steel platforms.

Index	Dimensions (m)	Weight (kg)
E377015	1.0x1.57	15.30
E377025	2.0x2.57	30.80

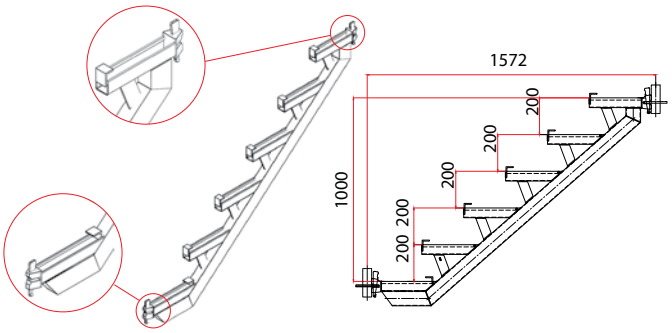

68. Steel standard Pipe

A standard component used in the structures with bays of atypical and different length. Pipe diameter: ø48.3 mm.

Index	Dimensions (m)	Weight (kg)
E440510	0.048x1.00	3.58
E440520	0.048x2.00	7.16
E440530	0.048x3.00	10.70
E440540	0.048x4.00	14.30
E440550	0.048x5.00	17.90
E440560	0.048x6.00	21.50

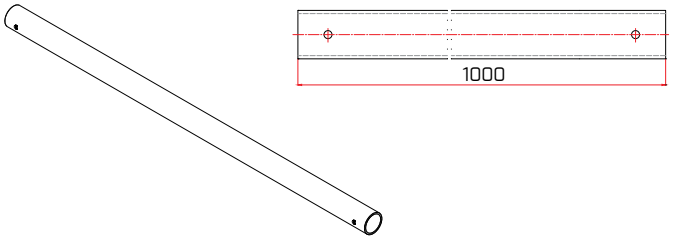

69. Aluminium standard Pipe

An alternative to the steel pipe – E4405xx.

Index	Dimensions (m)	Weight (kg)
E440610	0.048x1.00	1.50
E440620	0.048x2.00	3.00
E440630	0.048x3.00	4.51
E440640	0.048x4.00	6.01
E440650	0.048x5.00	7.51
E440660	0.048x6.00	9.02

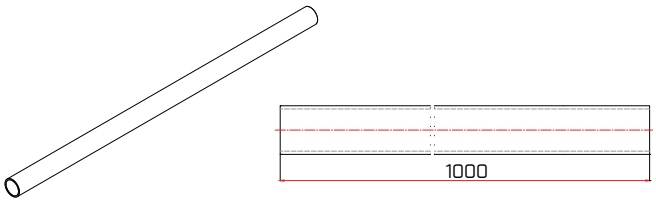

70. Normal connector

Used to connect two pipes of ø48.3 mm at 90°. Used to anchor the scaffolding to the facility. Fixed within the gusset plate of the vertical frame with the anchoring connector. Permissible normal connector load is 9.1 kN.

Index	Dimensions (m)	Weight (kg)
E581119	–	1.25

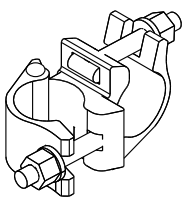

see p. 45

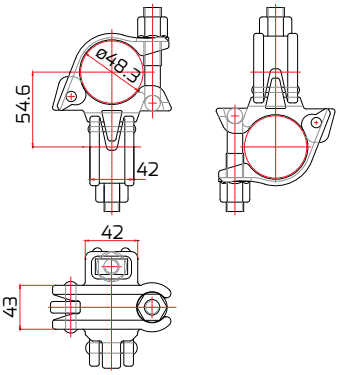

71. Rotating connector

With the flange nuts, used to connect two pipes of ø48.3 mm at any angle. Permissible rotating connector load is 5.9 kN.

Index	Dimensions (m)	Weight (kg)
E581319	0.40x2.45	1.20

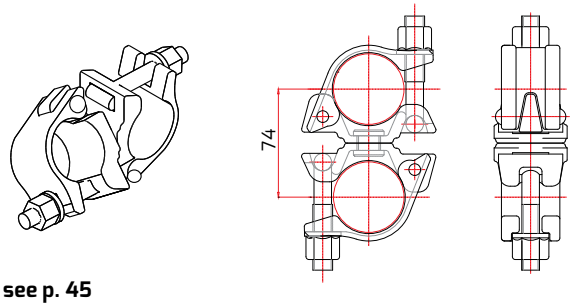

see p. 45

72. Longitudinal connector

Used to connect two pipes of ø48.3 mm longitudinally while keeping their coaxiality. The longitudinal connector should be used only with the centring pin 5FDIV10001 fixed where the two pipes contact each other. Permissible longitudinal connector load is 6 kN.

Index	Dimensions (m)	Weight (kg)
E581419	–	1.50
5FDIV10001	–	1.30

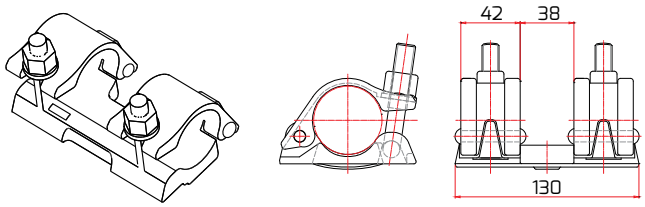

see p. 45

73 Anchoring connector

Used to anchor the scaffolding with the standard pipes of ø48.3 mm and the normal connectors. Used instead of the anchoring connection.

Index	Dimensions (m)	Weight (kg)
E284610	–	0.99

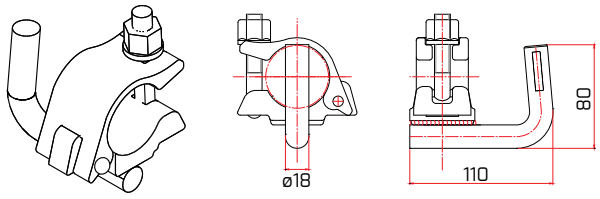

see p. 45

74. Double, normal wedge Rotating Connector

Used to connect the pipe of ø48.3 mm to the stand disk.

Index	Dimensions (m)	Weight (kg)
E373900	–	1.36
E373901	–	1.21
E373001	–	1.22

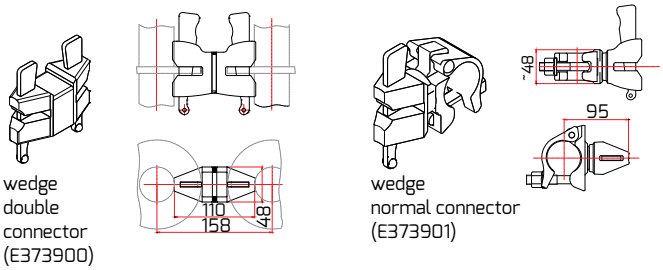

wedge double connector (E373900)

wedge normal connector (E373901)

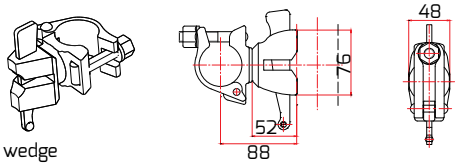

wedge rotating connector (E373001)

see p. 45

75. Clamping connector

Used to connect the pipe of ø48.3 mm to the steel building load-bearing structure components (e.g. I-sections). Connection should always be made of two connectors.

Index	Dimensions (m)	Weight (kg)
E284620	–	1.06

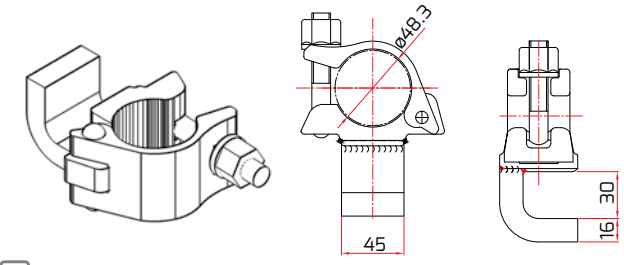

see p. 45

76. Anchoring spacing Connector with hook

Long anchoring connectors (1.30 m and 1.50 m long) are fixed to the vertical frames with two normal connectors for both frame stands. Short anchoring connectors (0.40 m and 0.80 m long) are fixed with one normal connector for only one frame stand located at the wall.

Index	Dimensions (m)	Weight (kg)
E286504	0.40	1.66
E286508	0.80	2.96
E286513	1.30	4.58
E286515	1.50	5.20

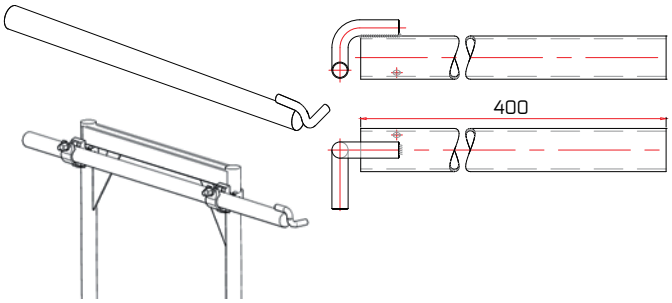

77. Safety cotter pin

A cotter pin protects the vertical frames against disengagement. It is inserted through the frame connection holes.

Index	Dimensions (m)	Weight (kg)
E511100	–	0.10

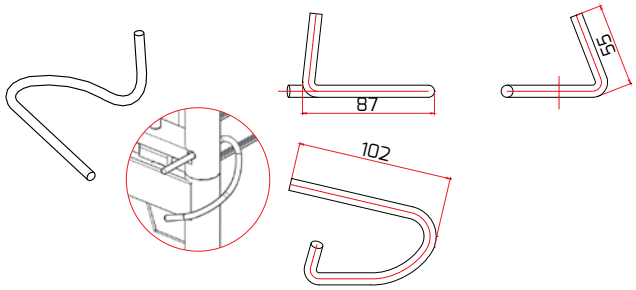

78. Assembly post

A component of the Safety Kit. One kit includes two posts which form with the telescopic railing a temporary protection for the person assembling the scaffolding.

Index	Dimensions (m)	Weight (kg)
E206600	2.00	6.60

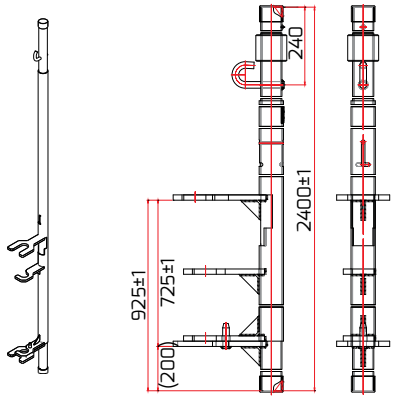

Use of the assembly post

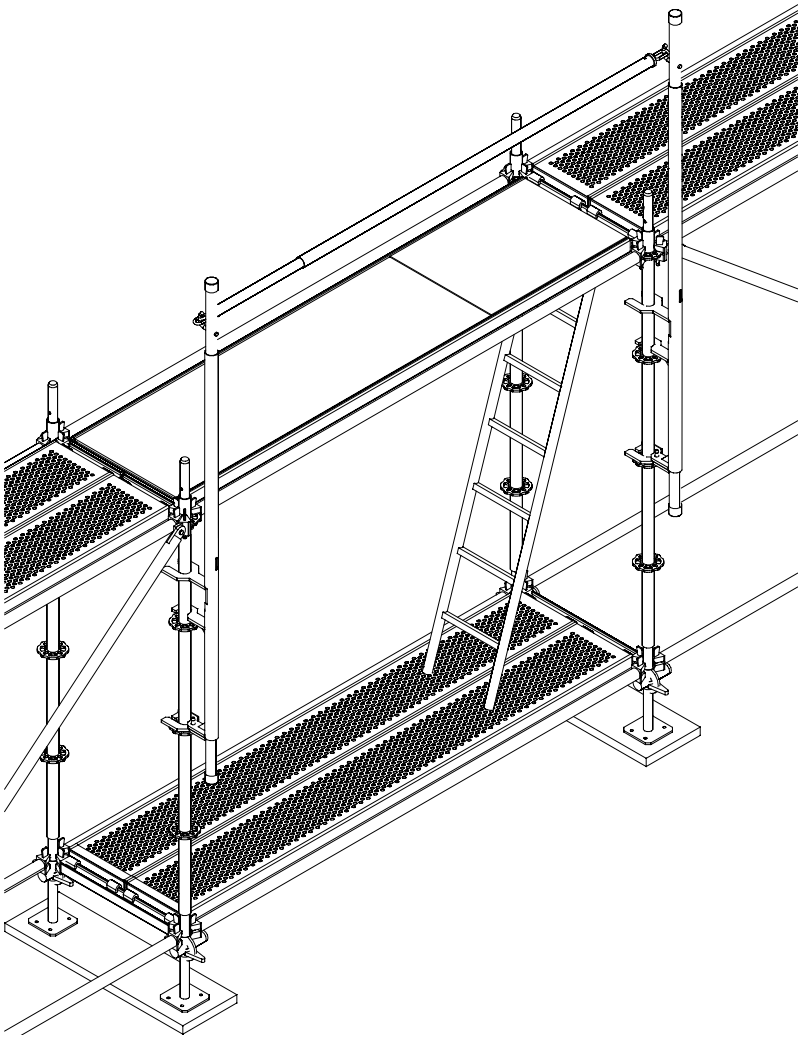

Radom Cathedral

Town Hall in Lwówek Śląski

79. Telescopic railing

A component of the Safety Kit. Used to move the assembly posts on next levels without the need to remove the kit. Adjustment range: from 1.5 up to 2.07 m or from 2.07 up to 3.7 m.

Index	Dimensions (m)	Weight (kg)
E206700	2.07-3.70	4.23
E206800	1.57-2.07	3.45

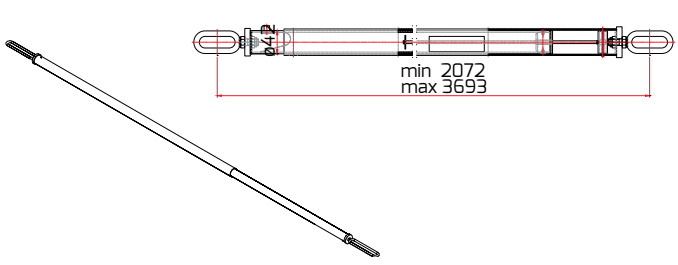

80. Mobile scaffolding guide beam

Used to assemble the mobile scaffolding of the ROTAX Plus scaffolding components. Used only with the base jack with two E571175 nuts and the MP–116 road wheel, and the horizontal brace.

Index	Dimensions (m)	Weight (kg)
E571110	1.09x2.6	37.60
E571173	0.73x1.9	26.30

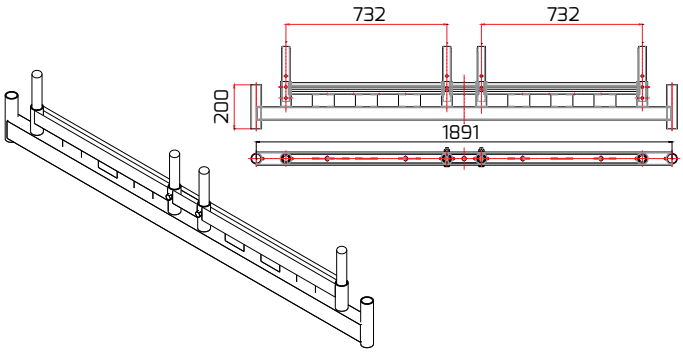

81. Base jack with two nuts

Used to compensate ground faults. Used also as a base jack of the mobile scaffolding.

Index	Dimensions (m)	Weight (kg)
E571175	0.40	4.10

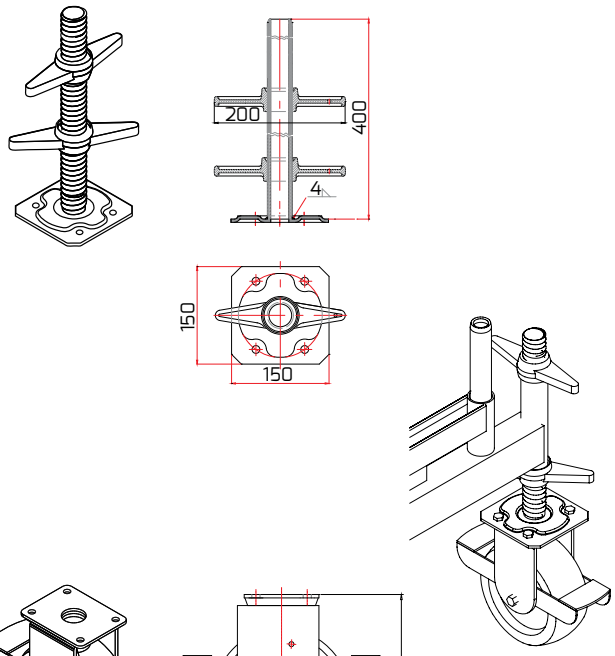

82. Road wheel

Used with E571175. The effective load of one wheel is 750 kg. The wheel is fitted with a lock.

Index	Dimensions (m)	Weight (kg)
MP-116	–	4.00

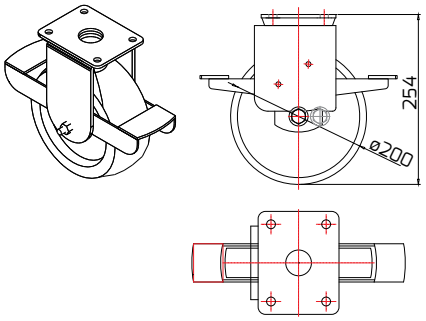

83. Plastic rawplug

A plug of ø14 mm made of plastic, used to fix the eye-bolts (E5110xx).

Index	Dimensions (m)	Weight (kg)
E511907	14 / 70	0.03
E511910	14 / 100	0.03

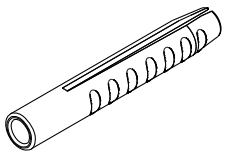

84. Anchor eye bolt

Bolt used for anchoring the scaffolding to a wall, used together with the rawplug (E511907).

Index	Dimensions (m)	Weight (kg)
E511012	0.12	0.20
E511016	0.16	0.25
E511019	0.19	0.30
E511023	0.23	0.40
E511028	0.28	0.50
E511030	0.30	0.55
E511035	0.35	0.60

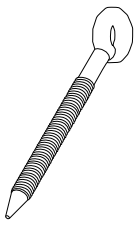

85. Hole plug

Used for plugging the holes created after removing the anchor bolts.

Index	Dimensions (m)	Weight (kg)
E511800	–	0.01

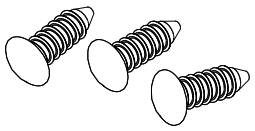

86. Tee head bolt, flange nut

Used together with the E581302 flange nut. A spare part for the couplings.

Index	Nazwa	Weight (kg)
E581301	Tee head bolt	0.10
E581302	Flange nut	0.04

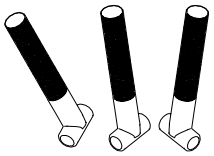

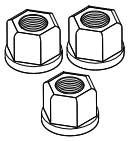

87. Scaffolding net

Securing net reinforced with the black-coloured threads, with fixing holes every 10 cm on the entire length. Basis weight – approx 65 g/m². Wind permeability – 50-55%.

Index	Dimensions (m)	Weight (kg)
E732025	2.50x10	0.40
	2.50x20	–
E732030	3.00x10	0.05
	3.00x20	–

88. Scaffolding canvas cover

The canvas cover coated on both sides (polyethylene – TEX 12x12 fabric). Basis weight approx 180 g/m².

Index	Dimensions (m)	Weight (kg)
E733725	2.60x10	0.18
	2.60x20	–
E733730	3.10x10	0.18
	3.10x20	–

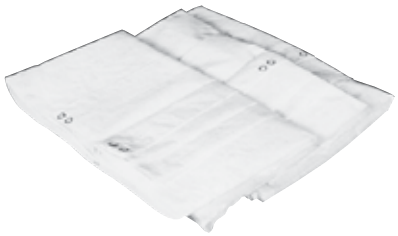

89. Electric hoisting winches – Mini 605, Maxi 1205, Maxi 1505

Lifting capacity – 120 kg; 2 lifting speeds 20/60 m/min; power – 0.45/1.35 kW; power supply – 230 V/50 Hz.

Lifting capacity – 150 kg; 2 lifting speeds 15/45 m/min; power – 0.45/1.35 kW; power supply – 230 V/50 Hz.

Index	
E552606 with 51 m cable	50.0
with 81 m cable	56.0
E552612 with 51 m cable	60.0
with 81 m cable	65.0
E552615 with 51 m cable	60.0
with 81 m cable	65.0

No.	Index	Component name	L./H. [m]	B. [m]	G. [kg]	
1.	E824301	Scaffolding pallet for 23 steel or aluminium frames, galvanized	1.50/1.41	0.80	53.00	
2.	E824302	Pallet for 15 E491325 or E491930 aluminium platforms for 30 E491325 or E491330 steel platforms, galvanized	1.50/1.41	0.65	52.00	
3.	E826701	Platform transport transom	0.67/0.24	–	4.28	
4.	E822800	Module pallet. The main profile of the wall 3 mm	1.28/0.88	0.80	40.20	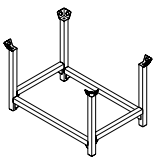
5.	E823800	Module light pallet. The main profile of the wall 2 mm	1.28/0.88	0.80	29.00	
6.	E822900	Module basket	1.06/0.59	0.61	30.40	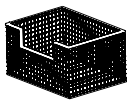
7.	E822808	Net pallet	1.28/0.80	0.88	69.70	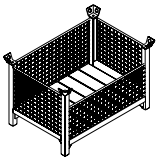
8.	E823808	Net pallet light	1.28/0.80	0.88	58.50	

MODULAR SCAFFOLDING – **STANDS COMPONENTS**

6. List of STAND components

The Altrad Event stand system is a set of components which can be removed and installed many times so as to create seats and standing room for spectators. The system is built on the structural grid 2.57 m and 1.57 m long, and 2.57 m wide which can be expanded in all directions.
The Altrad Event stand components and the components of the ROTAX Plus scaffolding ensure you can built even a complex spatial stand structure very quickly and with confidence.

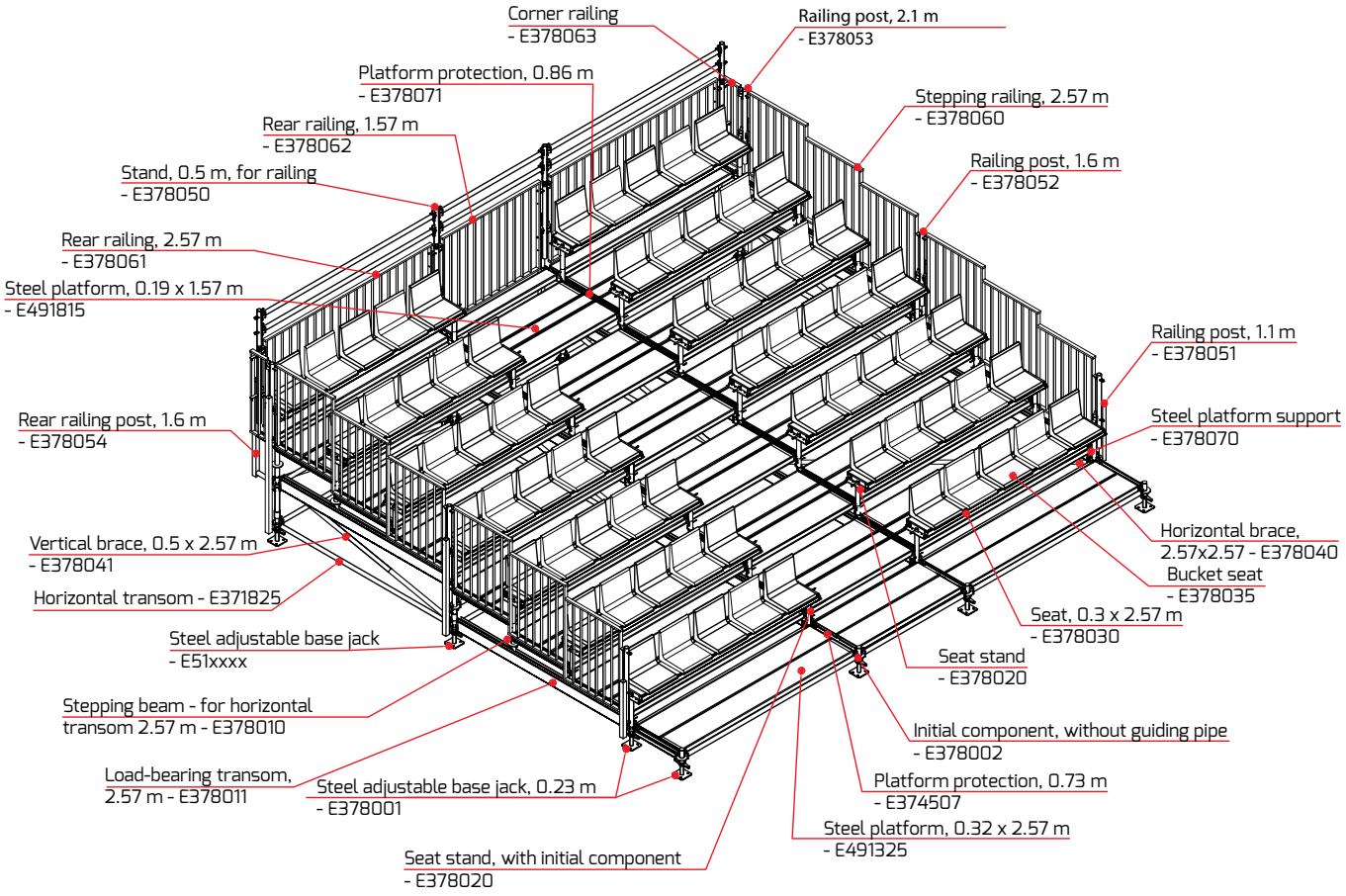

Example of a stand

1. Steel, adjustable base Jack 0.23 m

A component with the foot base, pipe threaded pin and the nut. Maximum extension height – 130 mm. This base jack is used only in the lowest stand rows.

Index	Dimensions (m)	Weight (kg)
E378001	0.23	2.70

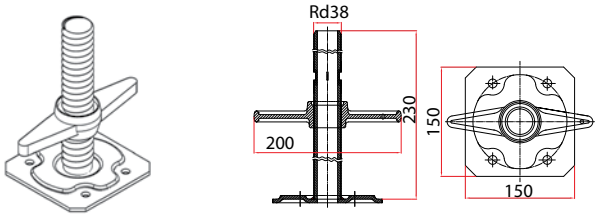

2. Initial component without guiding pipe

A component with the hole disk to attach the horizontal transoms. The initial component matches the adjustable base jacks and is used in the lowest stand rows. Since there is no guiding pipe you cannot install any stands on this component.

Index	Dimensions (m)	Weight (kg)
E378002	–	1.12

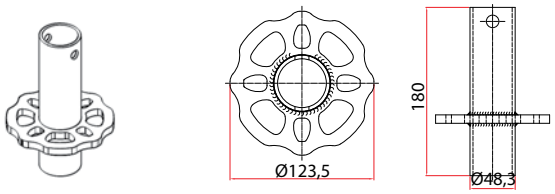

3. Stepping beam – for load-bearing transom, 2.57 m

A steel component installed on the 2.57 m load-bearing transom. The stepping beams ensures the whole stand can be inclined. Stepped every 167 mm.

Index	Dimensions (m)	Weight (kg)
E378010	2.57	10.58

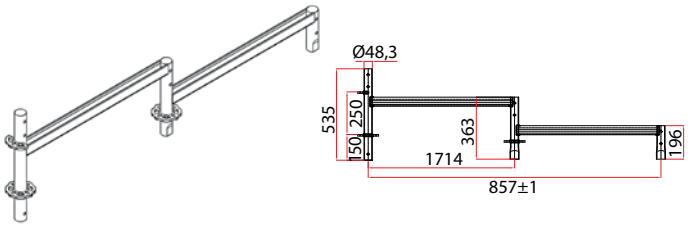

4. Load-bearing transom, 2.57 m

A main horizontal load-bearing component of a stand that supports the steel or stage platforms. Permissible uniformly distributed load – 7.5 kN/m.

Index	Dimensions (m)	Weight (kg)
E378011	2.57	34.42

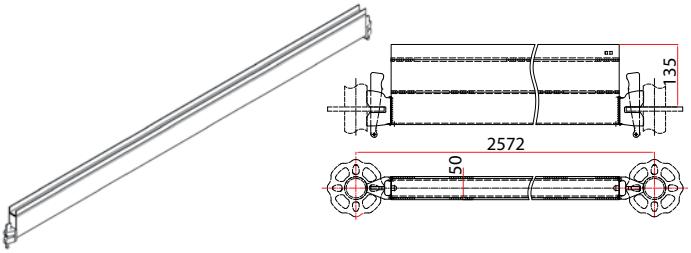

5. Overlay for double transom, 2.57 m

This component matches the double 2.57 m u-transom (E373525) and is an alternative to the 2.57 m load-bearing beam.

Index	Dimensions (m)	Weight (kg)
E378018	2.57	12.50

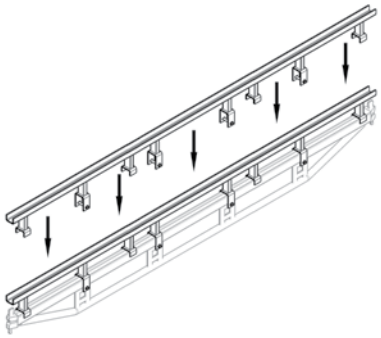

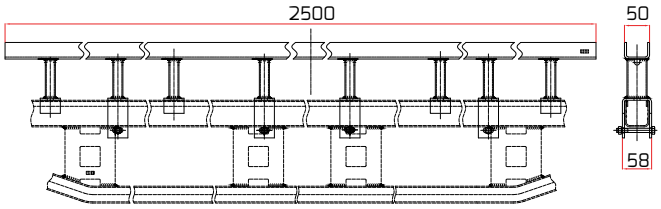

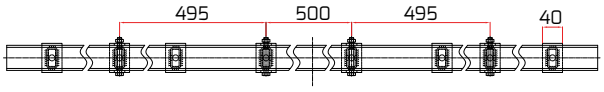

6. Seat stand

A steel component fixed to the stepping beam. Supports the aluminium seat (E378030).

Index	Dimensions (m)	Weight (kg)
E378020	–	3.51

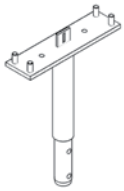

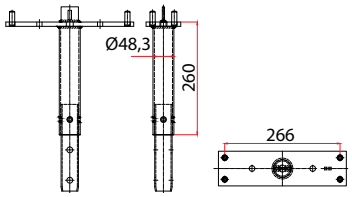

7. Stand for seat 0.45 m with initial component

A steel component which supports the aluminium seat (E378030). The stand is fitted with the hole disk and installed only in the lowest stand rows.

Index	Dimensions (m)	Weight (kg)
E378021	–	4.20

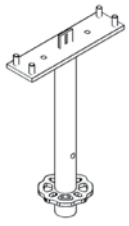

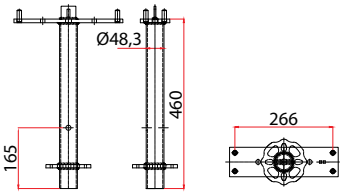

8. Seat bucket PVC

A component made of a weather-proof plastic. Fixed to the aluminium and plywood seat (E378030) with two M8 x 40 screws.

Index	Dimensions (m)	Weight (kg)
E378035	–	1.50

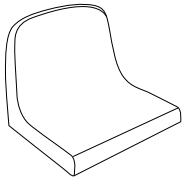

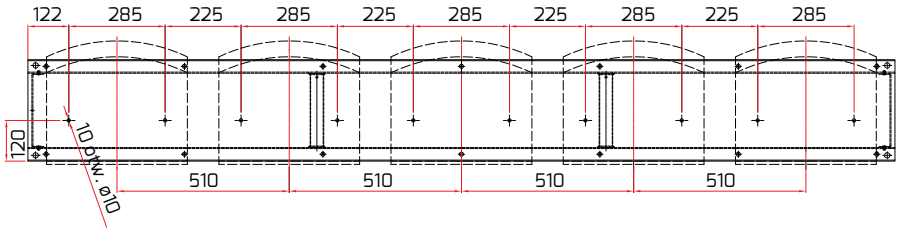

9. Aluminium and plywood Seat, 0.3 x 2.57 m

A component with the aluminium structure, covered with the waterproof plywood. The seat serves independently as a bench or a load-bearing component with the bucket seats (E378030) installed.

Index	Dimensions (m)	Weight (kg)
E378030	0.3x2.57 m	16.37

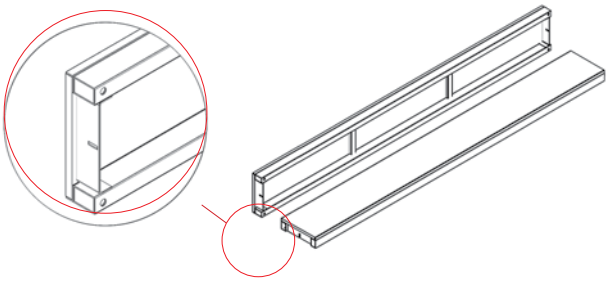

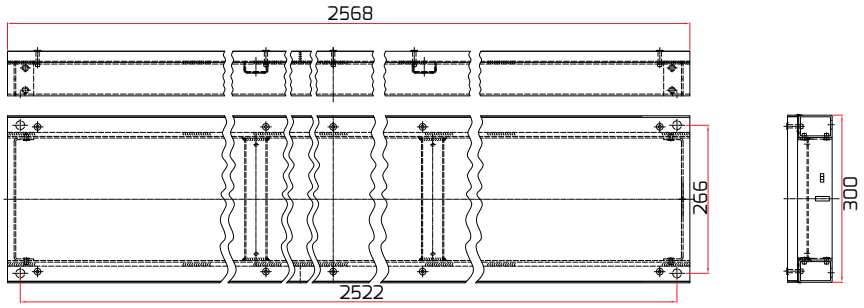

10. Horizontal brace

A steel component that stiffens the stand structure horizontally.

Index	Dimensions (m)	Weight (kg)
E378040	2.57x2.57	9.91

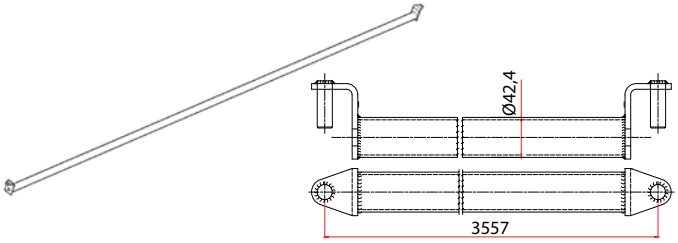

11. Vertical brace

A steel component that ensures the vertical stand structure planes are stiff.

Index	Dimensions (m)	Weight (kg)
E378041	2.57x0.5	9.02

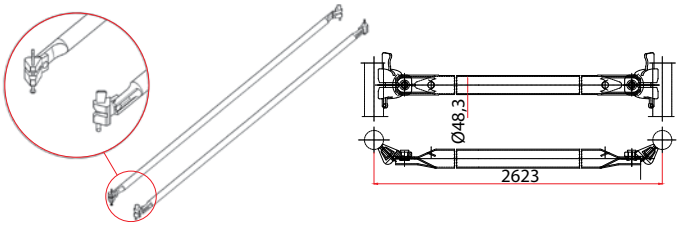

12. Stand for railings

A stand installed on the railing posts. The stand structure allows you to lift the horizontal railings by installing the standard horizontal ROTAX Plus transoms.

Index	Dimensions (m)	Weight (kg)
E378050	0.5	3.04

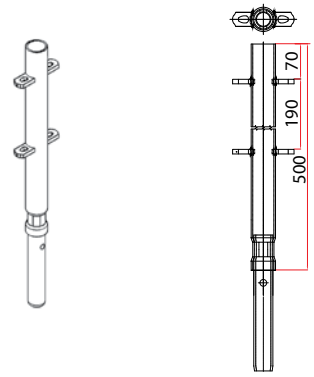

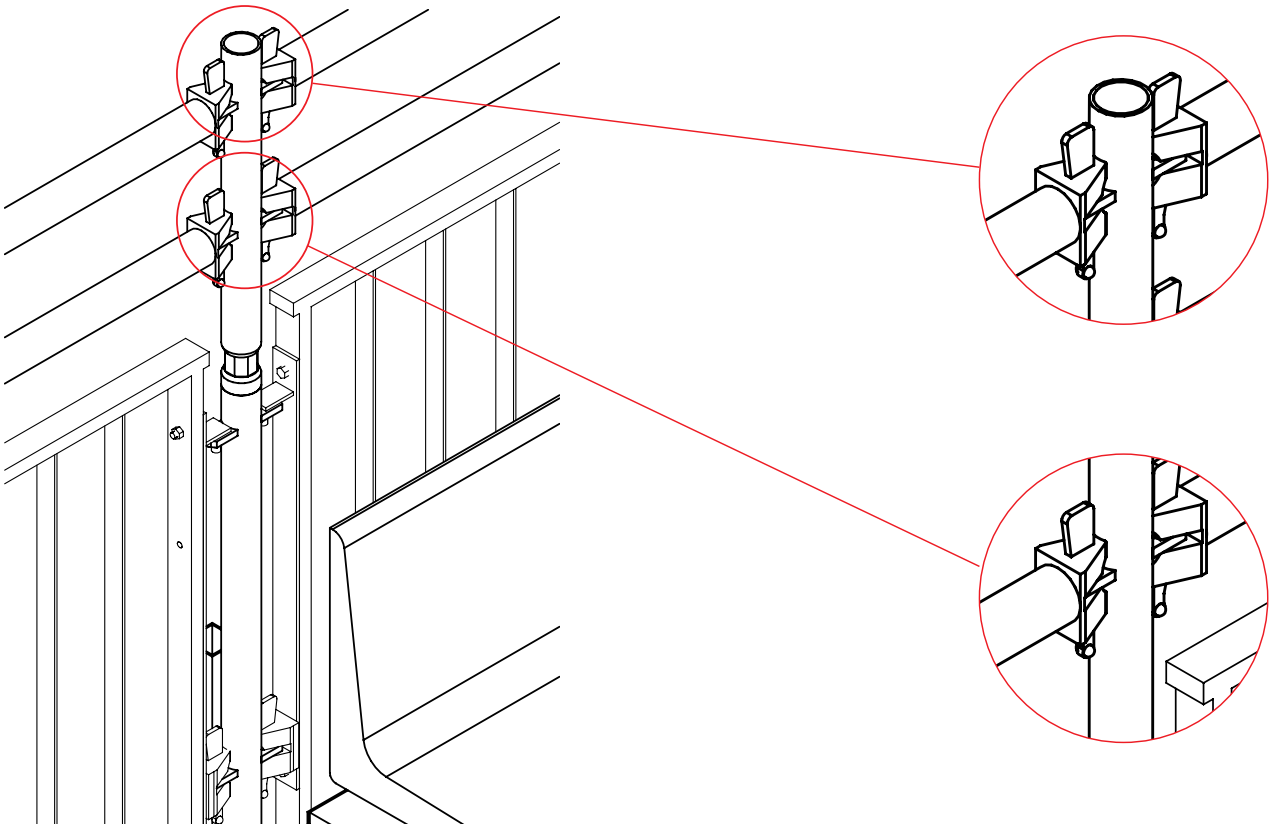

13. Posts for railings

Components to attach the protection railings. You can also fix the 0.19 m steel platform to the rear 1.6 m railing post. The posts are fixed to the hole disks of the stands, initial components or stepping beams with the heads.

Index	Dimensions (m)	Weight (kg)
E378051	1.1	6.52
E378052	1.6	8.78
E378053	2.1	10.66

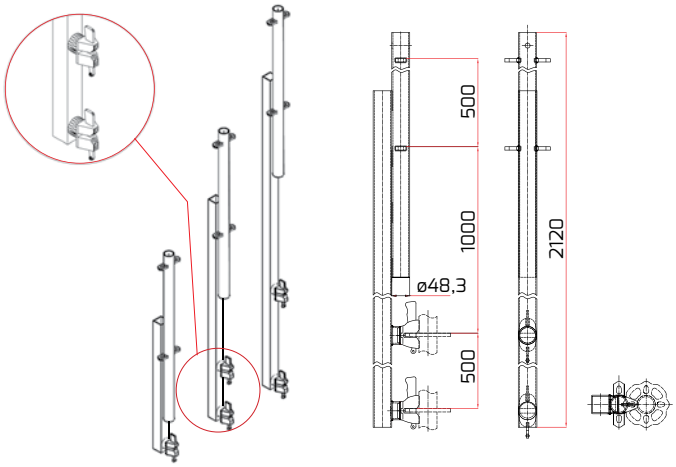

14. Rear Post for railings

The railing posts are fixed to the hole disks of the stands, initial components or stepping beams with the heads. Installation of the railing posts depends on the stand set-up. The posts are used to install the protection railings. You can also fix the 0.19 m platforms to the rear 1.6 m railing post.

Index	Dimensions (m)	Weight (kg)
E378054	1.6 m	10.27

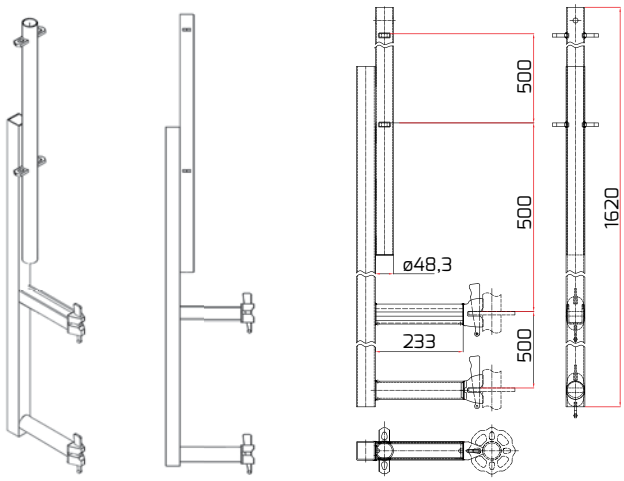

15. Stepping Rail

A steel component used as a side stand protection. Railing height: 1.1 m.

Index	Dimensions (m)	Weight (kg)
E378060	2.57	35.60

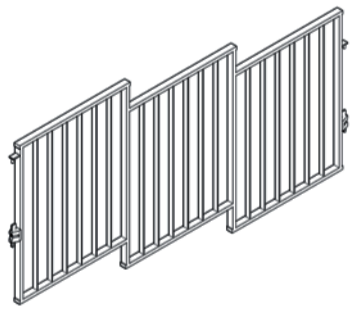

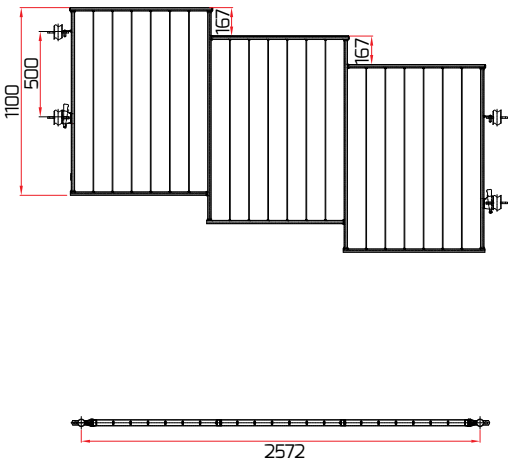

16. Rear Rail

A steel component used to protect the stand sides. Railing height: 1.1 m from the platform level. The railing structure allows you to change the position of the assembly catches.

Index	Dimensions (m)	Weight (kg)
E378061	2.57	31.56
E378062	1.57	21.05

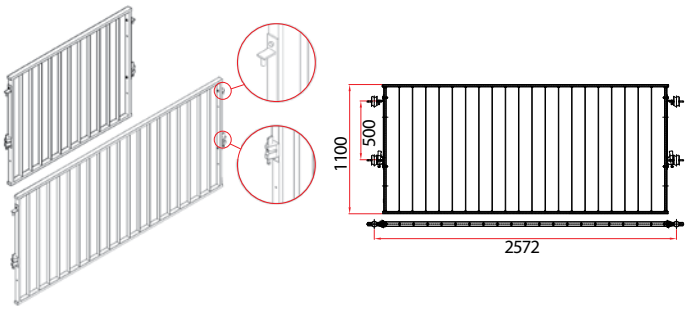

17. Corner Rail

A steel protection component. Installed in the stand corners to complete the railings.

Index	Dimensions (m)	Weight (kg)
E378063	–	7.12

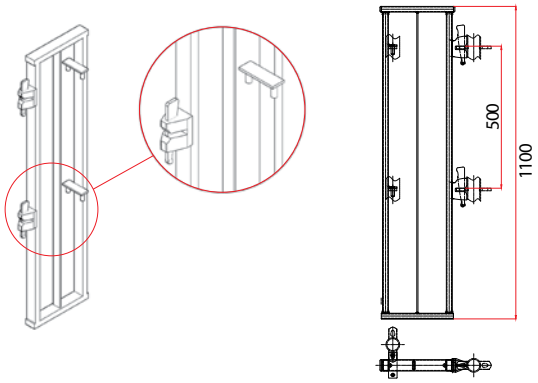

18. Steel platform Support

A steel component used only when the stand structure is completed with the steel platforms. Serves as a support for the platform catch.

Index	Dimensions (m)	Weight (kg)
E378070	–	0.48

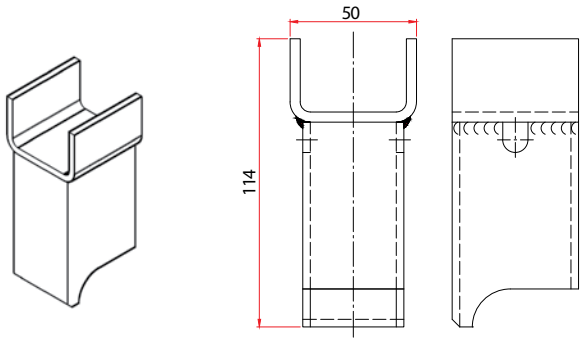

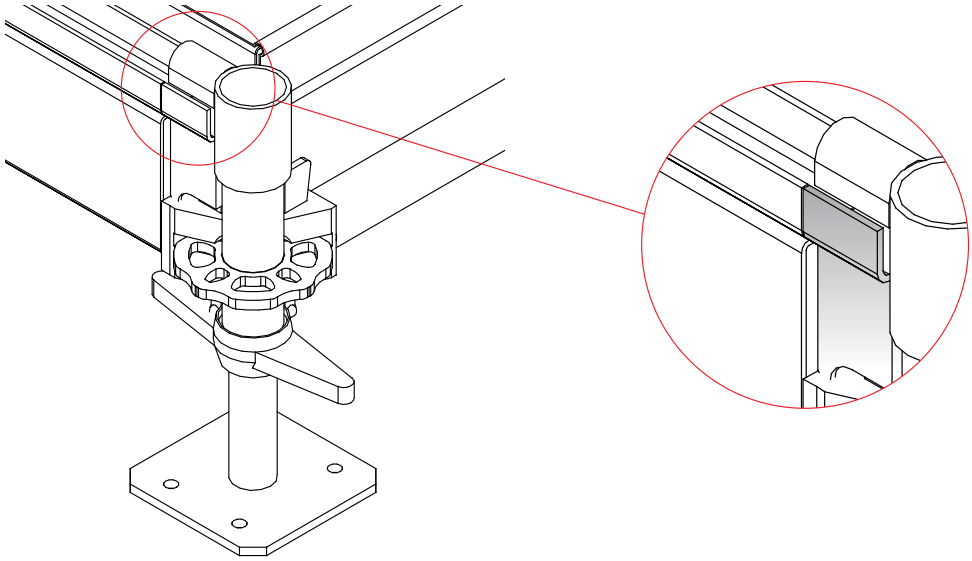

19. Platform protection

A steel component used to protect both the steel platforms and the seat stands against lifting. The protection is locked with the cotter pin (E511100).

Index	Dimensions (m)	Weight (kg)
E378071	0.86	1.82

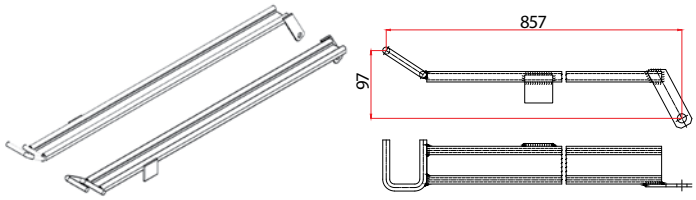

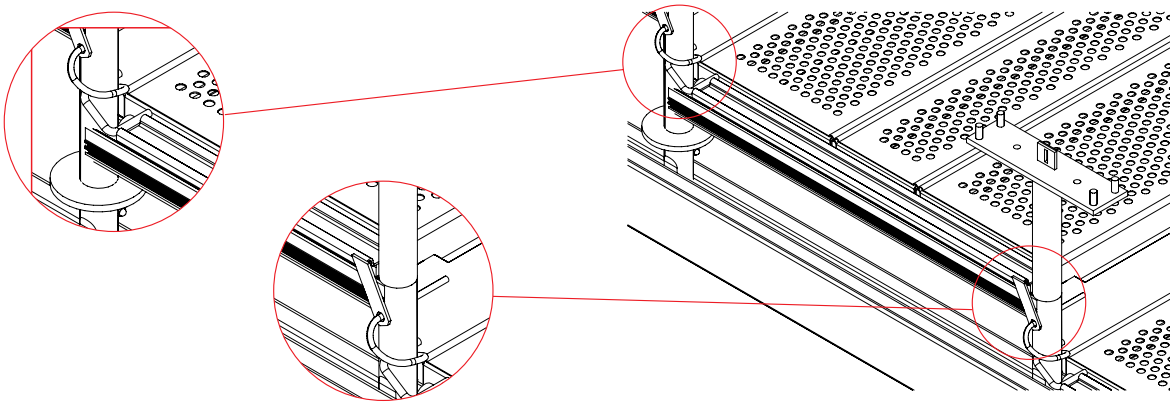

20. Platforms cap

A steel component used only with four aluminium and plywood platforms (E4993...) – completes the contact of these platforms.

Index	Dimensions (m)	Weight (kg)
E378072	–	0.15

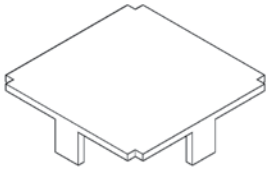

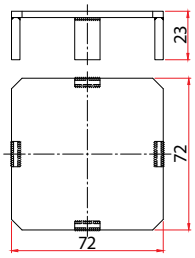

21. Aluminium and plywood Platform

Components with the aluminium structure, completed with plywood, used to complete the stand structure and build the stage platforms. Permissible effective load: 5 kN/m².

Index	Dimensions (m)	Weight (kg)
E499315	0.86x1.57	26.90
E499325	0.86x2.57	42.35

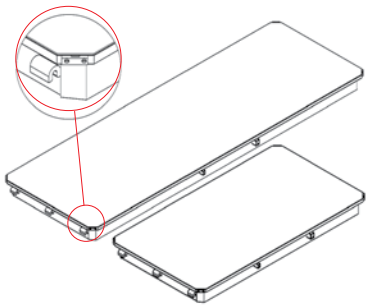

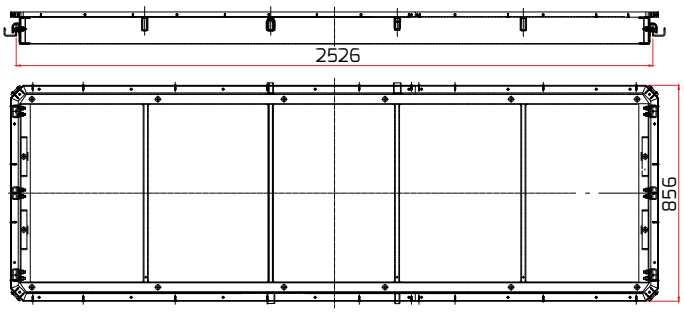

MODULAR SCAFFOLDING – **STANDS EXAMPLES OF SETS**

7. Altrad Event Stage – complete with stage platforms

No.	COMPONENT NAME	SYMBOL	STAND HEIGHT (m) (fixed stand width: 5 x 2.57 m + 2 x 1.57 m)					
			1.0	2.0	3.0	4.0	5.0	6.0
1	Initial component	E371300	16	32	48	64	80	96
2	Stand, 0.5 m	E371405	8	8	8	8	16	8
3	Stand, 1.0 m	E371410	0	8	8	8	8	8
4	Stand 1.5 m	E371415	0	8	8	8	8	16
5	Stand 2.0 m	E371420	0	0	8	8	8	8
6	Stand, 2.5 m	E371425	0	0	8	8	8	8
7	Stand, 3.0 m	E371430	0	0	0	8	8	8
8	Stand, 3.5 m	E371435	0	0	0	8	8	8
9	Stand, 4.0 m	E371440	0	0	0	0	8	8
10	Horizontal transom, 2.57 m	E371825	48	107	192	303	440	603
11	Horizontal transom, 1.57 m	E371815	16	30	48	70	96	126
12	Adjustable base jack, 0.4 m	E511204	16	32	48	64	80	96
13	Alu. platform, complete, 0.61 x 2.57 m	E491125	5	5	5	5	5	5
14	Alu. platform, complete, 0.61 x 1.57 m	E491115	2	2	2	2	2	2
15	Steel platform, 0.19 x 2.57 m	E491825	5	5	5	5	5	5
16	Steel platform, 0.19 x 1.57 m	E491815	2	2	2	2	2	2
17	Stage platform, 0.86 x 2.57 m	E499325	30	60	90	120	150	180
18	Stage platform, 0.86 x 1.57 m	E499315	12	24	36	48	60	72
19	Transverse U-transom, 0.73 m	E372407	8	8	8	8	8	8
20	Protection wedge	E371800a	56	104	152	200	248	296
21	Platform protection, 0.73 mm	E374507	8	8	8	8	8	8
22	Stepping beam – for load-bearing beam, 2.57 m	E378010	16	32	48	64	80	96
23	Load-bearing transom, 2.57 m	E378011	16	32	48	64	80	96
24	Seat stand	E378020	48	96	144	192	240	288
25	Seat, 0.32 x 2.57 m, with seat holes	E378030	35	65	95	125	155	185
26	Protection cotter pin	E511100	56	104	152	200	248	296
27	Vertical brace, 2.57 x 1.0 m	E373225	0	22	66	132	220	330
28	Vertical brace, 2.57 x 2.57 m	E378040	4	8	12	16	20	24
29	Vertical brace, 2.57 x 0.5 m	E378041	11	11	11	11	11	11
30	Seat stand, 0.45 m, with initial component	E378021	8	8	8	8	8	8
31	Railing post, 1.1 m	E378051	2	2	2	2	2	2
32	Railing post, 1.6 m	E378052	2	2	2	2	2	2
33	Railing post, 2.1 m	E378053	2	6	10	14	18	22
34	Rear railing post, 1.6 m	E378054	8	8	8	8	8	8
35	Stepping railing, 2.57 m	E378060	4	8	12	16	20	24
36	Rear railing, 2.57 m	E378061	5	5	5	5	5	5
37	Corner railing	E378063	2	2	2	2	2	2
38	Initial component, without guiding pipe	E378002	8	8	8	8	8	8
39	Steel adjustable base jack, 0.23 m	E378001	16	16	16	16	16	16
40	Rear railing, 1.57 m	E378062	2	2	2	2	2	2
41	Bucket seat (PCV)	E378035	175	325	475	625	775	925
42	Screw, M8x40, with washer and nut	----------	350	650	950	1250	1550	1850

Used in the covered areas

Used in the free areas

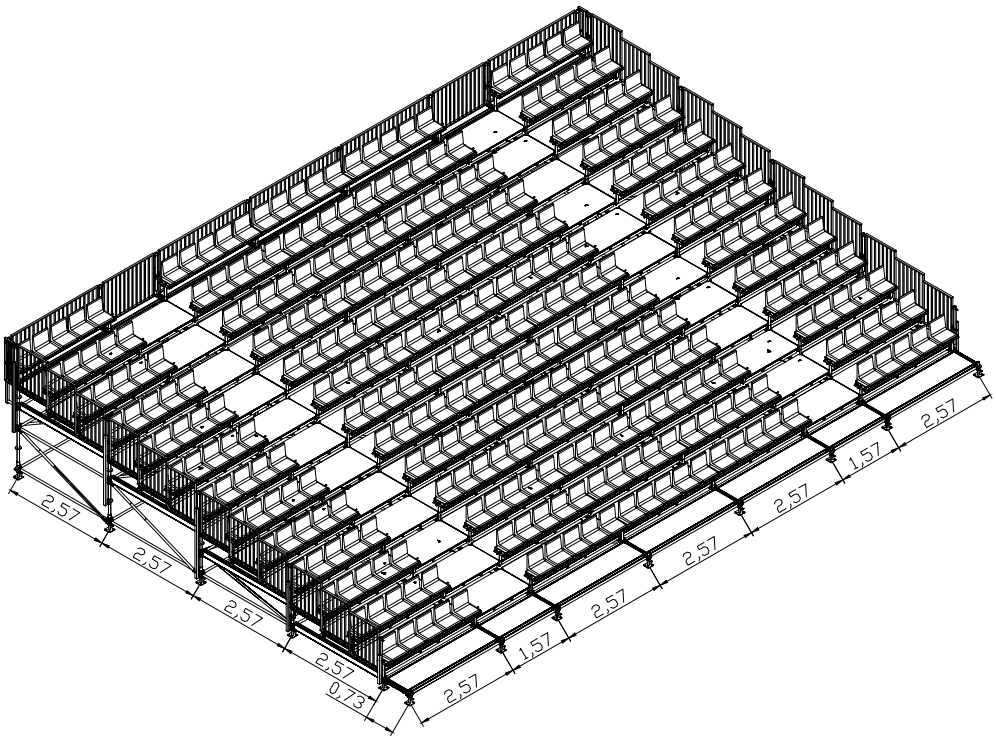

■ *Altrad Event stand – complete with stage platforms, H = 2 m*

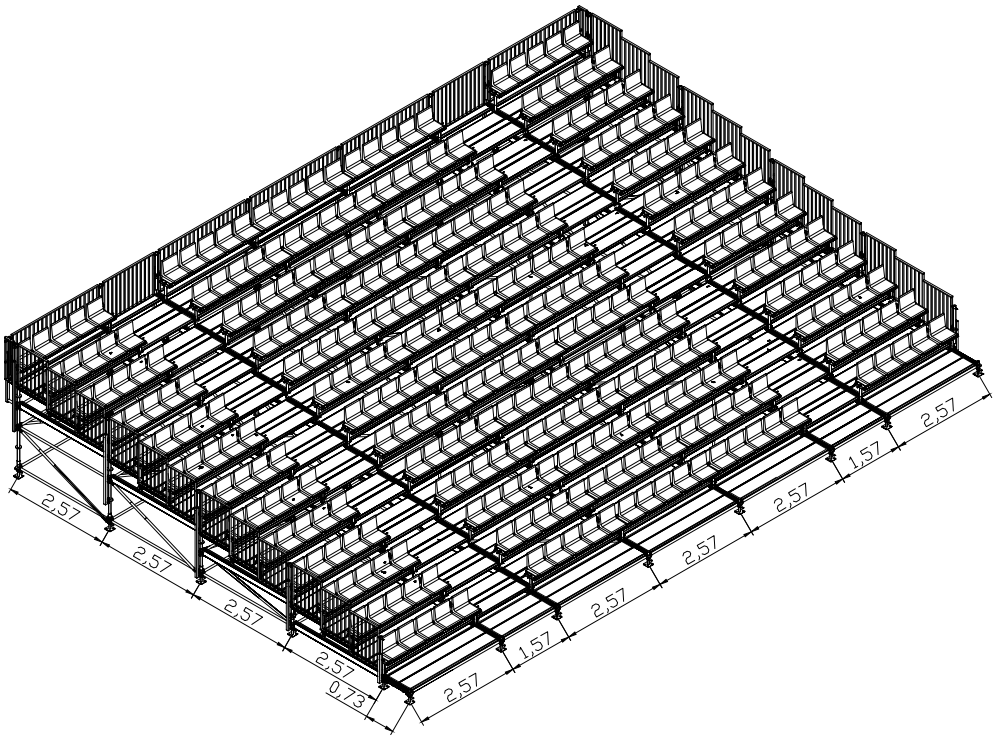

■ *Altrad Event stand – complete with steel platforms, H = 2 m*

8. Altrad Event Stand – complete with steel platforms

No.	COMPONENT NAME	SYMBOL	STAND HEIGHT (m) (fixed stand width: 5 x 2.57 m + 2 x 1.57 m)					
			1.0	2.0	3.0	4.0	5.0	6.0
1	Initial component	E371300	16	32	48	64	80	96
2	Stand, 0.5 m	E371405	8	8	8	8	16	8
3	Stand, 1.0 m	E371410	0	8	8	8	8	8
4	Stand 1.5 m	E371415	0	8	8	8	8	16
5	Stand 2.0 m	E371420	0	0	8	8	8	8
6	Stand, 2.5 m	E371425	0	0	8	8	8	8
7	Stand, 3.0 m	E371430	0	0	0	8	8	8
8	Stand, 3.5 m	E371435	0	0	0	8	8	8
9	Stand, 4.0 m	E371440	0	0	0	0	8	8
10	Horizontal transom, 2.57 m	E371825	48	107	192	303	440	603
11	Horizontal transom, 1.57 m	E371815	16	30	48	70	96	126
12	Adjustable base jack, 0.4 m	E511204	16	32	48	64	80	96
13	Steel platform, 0.32 x 2.57 m	E491325	70	130	190	250	310	370
14	Steel platform, 0.32 x 1.57 m	E491315	28	52	76	100	124	148
15	Steel platform, 0.19 x 2.57 m	E491825	35	65	95	125	155	185
16	Steel platform, 0.19 x 1.57 m	E491815	14	26	38	50	62	74
17	Transverse U-transom, 0.73 m	E372407	8	8	8	8	8	8
18	Protection wedge	E371800a	56	104	152	200	248	296
19	Platform protection, 0.73 mm	E374507	8	8	8	8	8	8
20	Stepping beam – for load-bearing beam, 2.57 m	E378010	16	32	48	64	80	96
21	Load-bearing transom, 2.57 m	E378011	16	32	48	64	80	96
22	Seat stand	E378020	48	96	144	192	240	288
23	Seat, 0.32 x 2.57 m	E378030	35	65	95	125	155	185
24	Protection cotter pin	E511100	48	96	144	192	240	288
25	Vertical brace, 2.57 x 1.0 m	E373225	0	22	66	132	220	330
26	Vertical brace, 2.57 x 2.57 m	E378040	4	8	12	16	20	24
27	Vertical brace, 2.57 x 0.5 m	E378041	11	11	11	11	11	11
28	Seat stand, 0.45 m, with initial component	E378021	8	8	8	8	8	8
29	Railing post, 1.1 m	E378051	2	2	2	2	2	2
30	Railing post, 1.6 m	E378052	2	2	2	2	2	2
31	Railing post, 2.1 m	E378053	2	6	10	14	18	22
32	Rear railing post, 1.6 m	E378054	8	8	8	8	8	8
33	Stepping railing, 2.57 m	E378060	4	8	12	16	20	24
34	Rear railing, 2.57 m	E378061	5	5	5	5	5	5
35	Corner railing	E378063	2	2	2	2	2	2
36	Steel platform support	E378070	16	32	48	64	80	96
37	Initial component, without guiding pipe	E378002	8	8	8	8	8	8
38	Platform protection, 0.86 m	E378071	48	96	144	192	240	288
39	Steel adjustable base jack, 0.23 m	E378001	16	16	16	16	16	16
40	Rear railing, 1.57 m	E378062	2	2	2	2	2	2
41	Bucket seat (PCV)	E378035	175	325	475	625	775	925
42	Screw, M8x40, with washer and nut	----------	350	650	950	1250	1550	1850

Used in the covered areas

Used in the free areas

MODULAR SCAFFOLDING – ROTAX Plus
ADDITIONAL TABLES

9. Girder effective load capacity

Table 6. Effective load capacity of aluminium ROTAX Plus girders

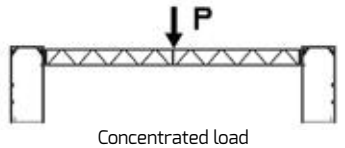

Concentrated load

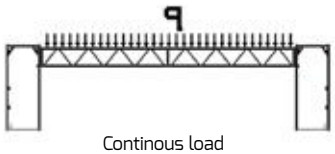

Continous load

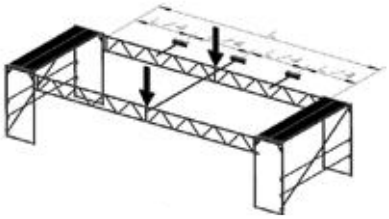

Upper belt stabilisation

(anchored transversely)

Aluminium girders, 0.4 XL + min. 0.1 m

Girder supports spacing (bay dimens.) L [m]	Concentrated force F (kN)	Concentrated force F (kN)		Uniform load q (kN/m)
	Loaded with force concentrated in the middle of the bay length. Upper belt stabilised in the middle of the bay length.	Loaded with force concentrated in the middle of the bay length. Upper belt stabilised uniformly every (...) m.		Loaded uniformly over the entire length of the upper belt. Stabilised with platforms installed over the entire length of the upper belt.
3.07	7.5	10.9	(1.02)	2.87
4.14	5.7	10.5	(1.38)	2.17
5.14	4.4	4.3	(1.29)	2.84
6.14	3.5	4.3	(1.54)	2.29
8.0	2.3	6.9	(1.36)	1.15
10.0	1.6	4.9	(1.42)	0.83
12.0	1.5	4.1	(1.5)	0.51

Aluminium girders, 0.5 XL + min. 0.1 m

Girder supports spacing (bay dimens.) L [m]	Concentrated force F (kN)	Concentrated force F (kN)		Uniform load q (kN/m)
	Loaded with force concentrated in the middle of the bay length. Upper belt stabilised in the middle of the bay length.	Loaded with force concentrated in the middle of the bay length. Upper belt stabilised uniformly every (...) m.		Loaded uniformly over the entire length of the upper belt. Stabilised with platforms installed over the entire length of the upper belt.
3.07	7.66	23.13	(1.02)	4.15
4.14	5.82	14.2	(1.38)	2.98
5.14	4.45	13.8	(1.29)	2.29
6.14	3.49	10.93	(1.54)	2.09
8.0	2.29	7.53	(1.36)	1.27
10.0	1.58	5.73	(1.42)	0.91
12.0	1.15	6.13	(1.5)	0.6

Table 7. Effective load capacity of steel ROTAX Plus girders

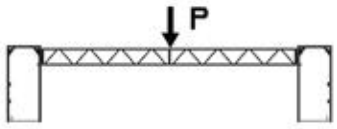

Concentrated load

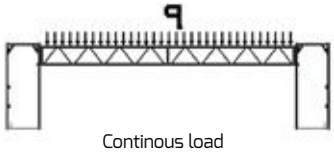

Continous load

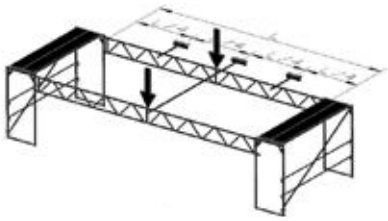

Upper belt stabilisation

(anchored transversely)

Steel girders, 0.4 XL + min. 0.1 m

Girder supports spacing (bay dimens.) L [m]	Concentrated force F (kN)	Concentrated force F (kN)		Uniform load q (kN/m)
	Loaded with force concentrated in the middle of the bay length. Upper belt stabilised in the middle of the bay length.	Loaded with force concentrated in the middle of the bay length. Upper belt stabilised uniformly every (...) m.		Loaded uniformly over the entire length of the upper belt. Stabilised with platforms installed over the entire length of the upper belt.
3.07	8.13	9.73	(1.02)	2.2
4.14	6.61	9.0	(1.38)	1.69
5.14	5.57	8.2	(1.29)	2.37
6.14	4.5	5.13	(1.54)	1.97
8.0	3.05	5.53	(1.36)	0.8
10.0	2.08	3.87	(1.42)	0.58
12.0	1.52	3.07	(1.5)	0.41

Steel girders, 0.4 XL + min. 0.1 m

Girder supports spacing (bay dimens.) L [m]	Concentrated force F (kN)	Concentrated force F (kN)		Uniform load q (kN/m)
	Loaded with force concentrated in the middle of the bay length. Upper belt stabilised in the middle of the bay length.	Loaded with force concentrated in the middle of the bay length. Upper belt stabilised uniformly every (...) m.		Loaded uniformly over the entire length of the upper belt. Stabilised with platforms installed over the entire length of the upper belt.
3.07	8.45	9.27	(1.02)	2.41
4.14	6.91	13.53	(1.38)	2.39
5.14	5.59	9.27	(1.29)	1.47
6.14	4.53	10.47	(1.54)	1.71
8.0	2.97	6.2	(1.36)	1.07
10.0	2.09	4.67	(1.42)	0.69
12.0	1.53	3.67	(1.5)	0.49

10. Connector effective loads

Table 8.

No.	Index	Component Name		Permissible Connector Effective Loads	No.	Index	Component Name		Permissible Connector Effective Loads
1.	E581119	Normal connector	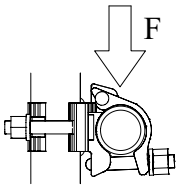	F≤9.1 kN	5.	E373900	Double wedge connector	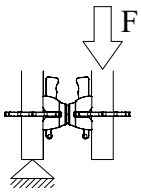	F≤4.0 kN (other values according to the loads of the RO-TAX Plus node)
2.	E581320	Rotating connector	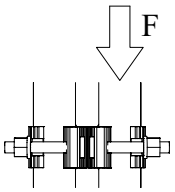	F≤5.9 kN	6.	E373901	Normal wedge connector	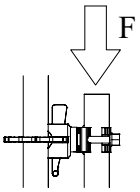	F≤6.8 kN
3.	E581419	Longitudinal connector	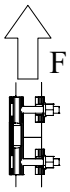	F≤6.0 kN	7.	E373001	Rotating wedge connector	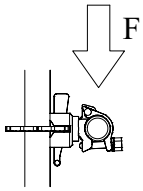	F≤5.1 kN
4.	E284620	Clamp connector	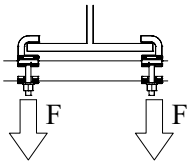	F≤9.0 kN	8.	E371200	Disk connector	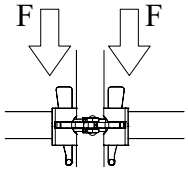	∑F≤11.1 kN

11. Platform loads

Table 9.

Platform load class acc. to EN-12 811							
No.	Platform type	3.07	2.57	2.07	1.57	1.09	0.73
1.	Steel platforms 0.32 E4913xx, 4914xx, 4916xx, 4955xx, 4956xx	4 kl. (3.0 kN/m²)	5 kl. (4.5 kN/m²)	6 kl. (6 kN/m²)	6 kl. (6 kN/m²)	6 kl. (6 kN/m²)	6 kl. (6 kN/m²)
2.	Additional steel platforms 0.19 E491810xx	6 kl. (6.0 kN/m²)	6 kl. (6.0 kN/m²)	6 kl. (6.0 kN/m²)	6 kl. (6.0 kN/m²)	6 kl. (6.0 kN/m²)	6 kl. (6.0 kN/m²)
3.	Alu-plywood platforms 0.61 E4920xx, 4919xx, 4921xx	3 kl. (2.0 kN/m²)	3 kl. (2.0 kN/m²)	3 kl. (2.0 kN/m²)	3 kl. (2.0 kN/m²)	3 kl. (2.0 kN/m²)	3 kl. (2.0 kN/m²)

Length – L (m)							
No.	Platform type	3.00	2.50	2.00	1.50	1.00	0.70
4.	Filling platform 0.30 E4943xx	3 kl. (2.0 kN/m²)	4 kl. (3.0 kN/m²)	5 kl. (4.5 kN/m²)	6 kl. (6.0 kN/m²)	6 kl. (6.0 kN/m²)	6 kl. (6.0 kN/m²)
5.	Filling platform 0.19 E4944xx	4 kl. (3.0 kN/m²)	5 kl. (4.5 kN/m²)	6 kl. (6.0 kN/m²)	6 kl. (6.0 kN/m²)	6 kl. (6.0 kN/m²)	6 kl. (6.0 kN/m²)

12. Permissible span for moveable platforms made of wood or planks

Table 10.

Permissible spacing for the moveable platforms made of wood or planks (acc. to tab. 8, DIN 4420, T1)						
Loading class	Platform or plank width [cm]	Platform or plank thickness [cm]				
		3.00	3.50	4.00	4.50	5.00
1, 2, 3	20	1.25	1.50	1.75	2.25	2.50
	24 i 28	1.25	1.75	2.25	2.50	2.75
4	20	1.25	1.50	1.75	2.25	2.50
	24 i 28	1.25	1.75	2.00	2.25	2.50
5	20, 24, 28	1.25	1.25	1.50	1.75	2.00
6	20, 24, 28	1.00	1.25	1.25	1.50	1.75

13. Transoms complete with perforated platforms

Table 11.

Transoms complete with perforated platforms		
Transom length [m]	Number of platforms	
	0.32 m	0.19 m
0.45	1	–
0.73	2	–
1.09	3	–
1.57	4	1
2.07	6	–
2.57	7	1
3.07	9	–

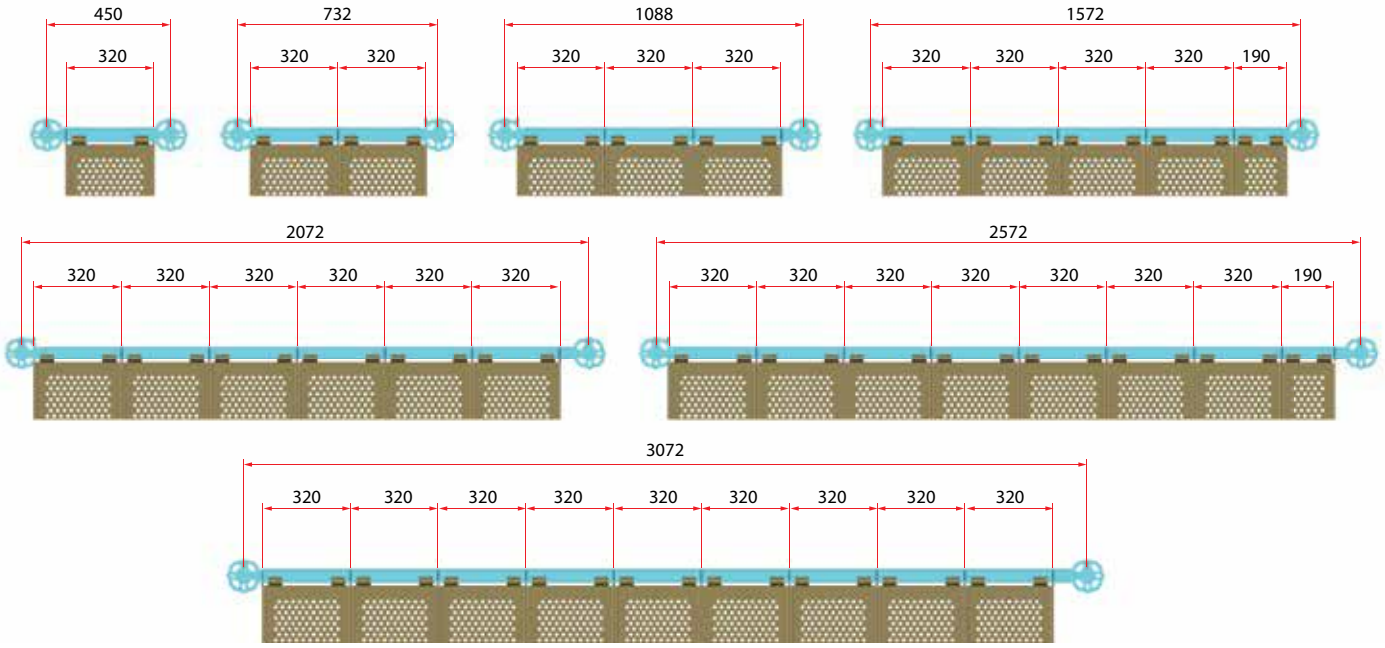

14. Adjustable base jack load capacity

Table 12. Standard base jacks

Base jack type		Permissible nut loosening X [cm]				
		20	30	40	50	60
E511204	Permissible vertical load* [**kN**]	40	–	–	–	–
E511206		40	29	22	–	–
E511208		40	29	22	17	15

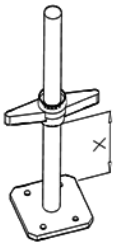

* The values shown include 5% of horizontal forces. By performing appropriate calculations you can use higher effective loads.

Table 13. Reinforced base jack, 1.5 m

Base jack type		Permissible nut loosening X [cm]					
		30+20	**30**+30	**30**+40	**30**+50	**30**+60	**30**+70
E511313	Permissible vertical load* [**kN**]	38	26	20	16	15	13

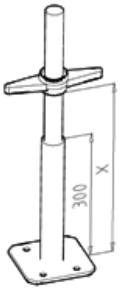

* The values shown include 5% of horizontal forces. By performing appropriate calculations you can use higher effective loads.

VII

MODULAR SCAFFOLDING – ROTAX Plus
GATE PASSAGES

15. Gate passages

Lattice girders are used to provide passages under the scaffolding. There are two types of solutions. The first solution uses lattice girders with the welded heads (E3767...). The girders are fixed to the stand hole disks at the working platform height according to the figure below. The system platforms are installed on the girders, perpendicularly to the building facade. To add next scaffolding levels you should install the girder pipe connector (E376700) which is the starting point for next stands. The second solution uses lattice girders installed on the outside of the stands with the normal connectors (E581119). The distance between the girder supporting points should be the sum of two system bay lengths (e.g. 2 x 2.57 m). When the span is 6.144 m install the 1.0 m stands in the middle of this length using the normal connectors. Connect the stands with the horizontal transoms and the horizontal U-transom which will support the system platforms (figure below).
When building gate passages of lattice girders you can use them instead of max. two bays. For the scaffolding 20 – 34 m high and 1.09 wide provide additional structure reinforcement above the girder and install the standard pipes 6.0 m long to reinforce the stands in the passage zone.

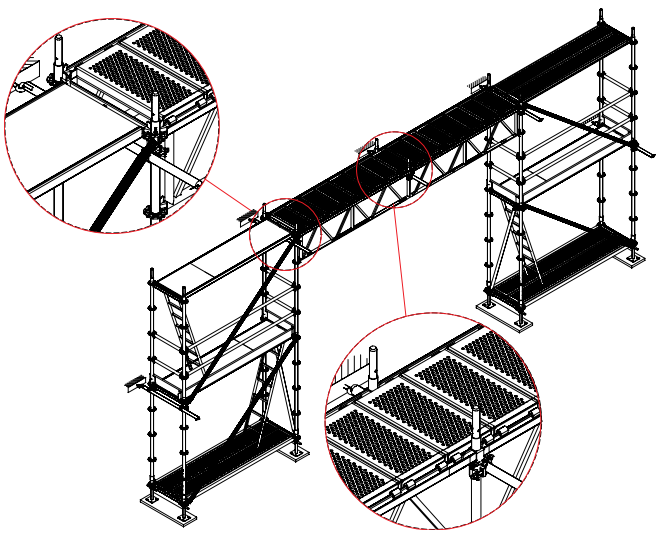

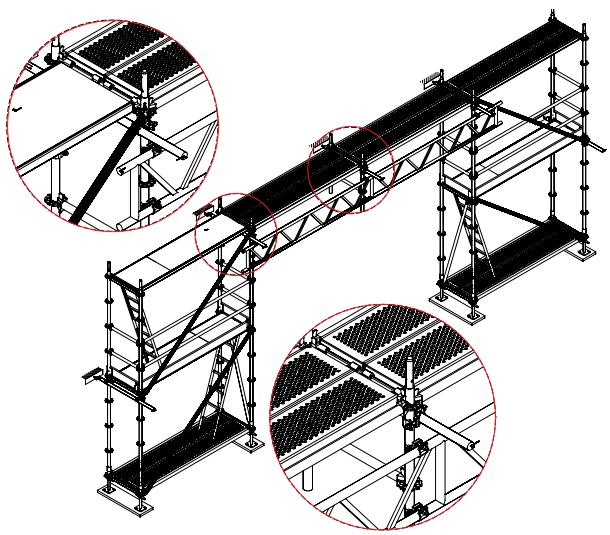

MODULAR SCAFFOLDING – ROTAX Plus
ALUMINIUM PLATFORMS

16. Aluminium platforms

To facilitate construction works an aluminium platform system has been designed. They act as movable platforms. When laid on the scaffolding or the building structural elements they act as a working platform, ceiling, communication and inspection platforms.

A platform is made of the aluminium sections and skin trapezoidal plate. The system includes also steel auxiliary components which are rust-protected. You can use platforms 4.25 m, 5.2 m, 6.1 m and 7.1 m long and 0.6 wide. The platform load capacity is 2 kN/m².
When selecting the platform length you should consider the overlap to be kept to properly support the component. For ALTRAD-MOSTOSTAL platforms the overlap is at least 400 mm. Fig. 10.1 presents an example of supporting the aluminium platform on the structure made of the pole scaffoldings.

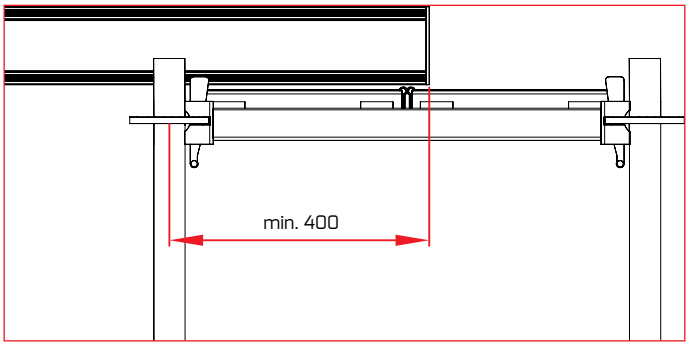

Figure 10.1

When several platforms are laid next to each other you should join them with a clamp (E491003). The clamps are installed both on the upper and bottom platform plane (Fig. 10.2). Installation includes fixing the clamp handles on the side sections of the adjacent platforms and clamping the movable clamp parts by driving a wedge (Fig. 10.3).

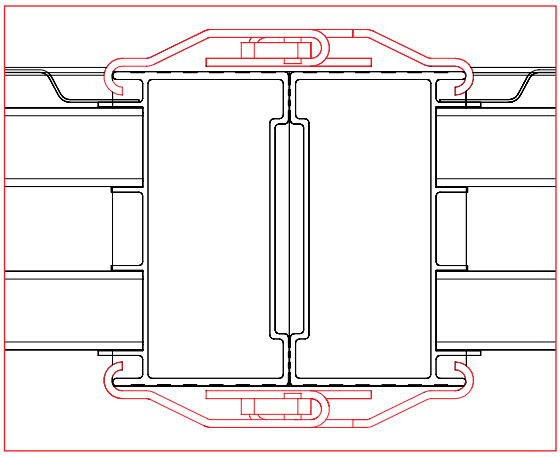
Figure 10.2

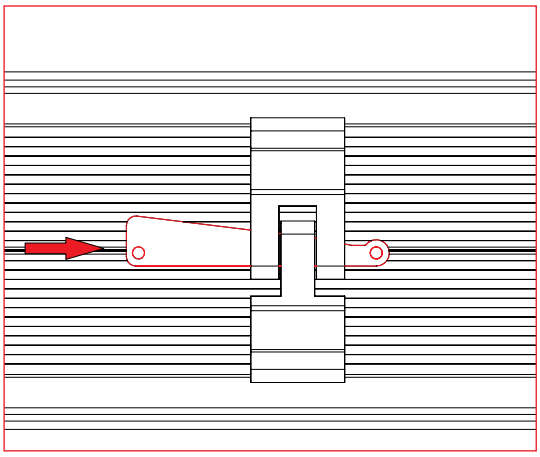
Figure 10.3

To protect the persons on the platform you should install the protective railings. To do this you should use the railing post, railing clamp and standard pipes.

The railing post is installed by clamping its movable part (Fig. 10.4) by driving a wedge (Fig. 10.5).

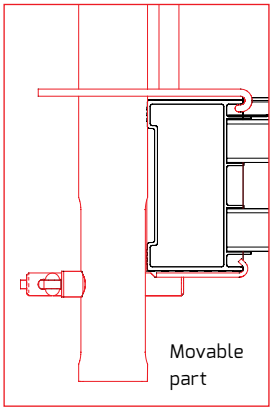

Figure 10.4

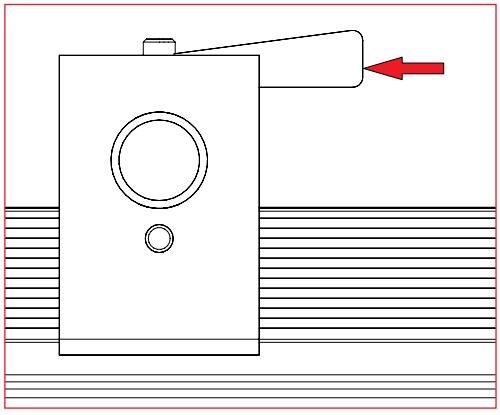
Figure 10.5

By using the railing handle you can fasten the universal pipe to the post to act as a railing. The horizontal pipe is clamped to the vertical pipe with a screw fitted with a handle (Fig. 10.6).

The upper railing should be installed 1.0 m over the platform surface.

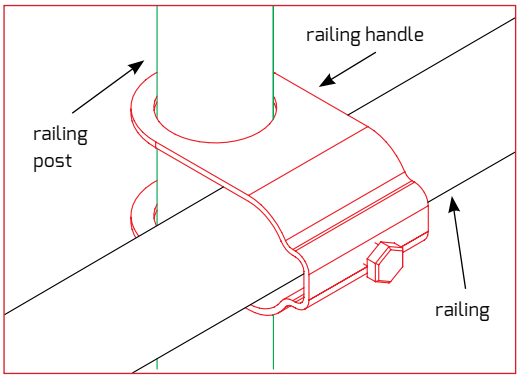

Figure 10.6

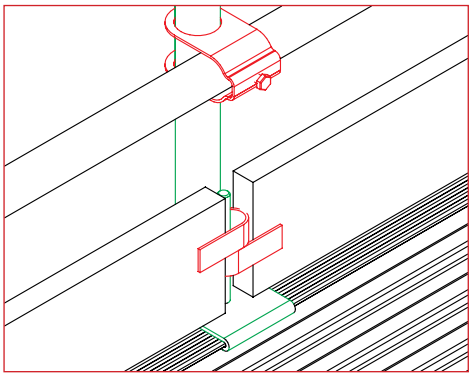

Figure 10.7

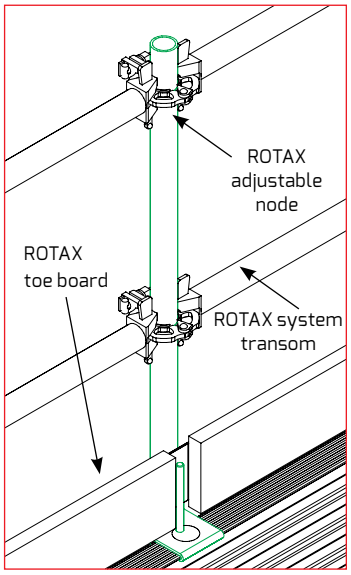

Figure 10.8

Alternatively, instead of installing the railings in this manner you can install the standard pipes with the rotating or normal connectors. Join the length of the standard pipes with a longitudinal connector.

The railing posts should be spaced so that you could install the system toe boards. A post allows for installing both the Mostostal Plus system scaffolding toe boards (Fig. 10.7) and the ROTAX scaffolding system toe boards.

Spacing the posts at 0.73 m, 1.09 m, 1.57 m, 2.07 m, 2.57 m or 3.07 m is also important when you want to use the ROTAX transoms of the system length as the protective railings. However, this solution requires using the additional component – a ROTAX adjustable node (E371200) (Fig. 10.8).

Below is a figure presenting an example of the frame scaffolding set-up with the aluminium platforms.

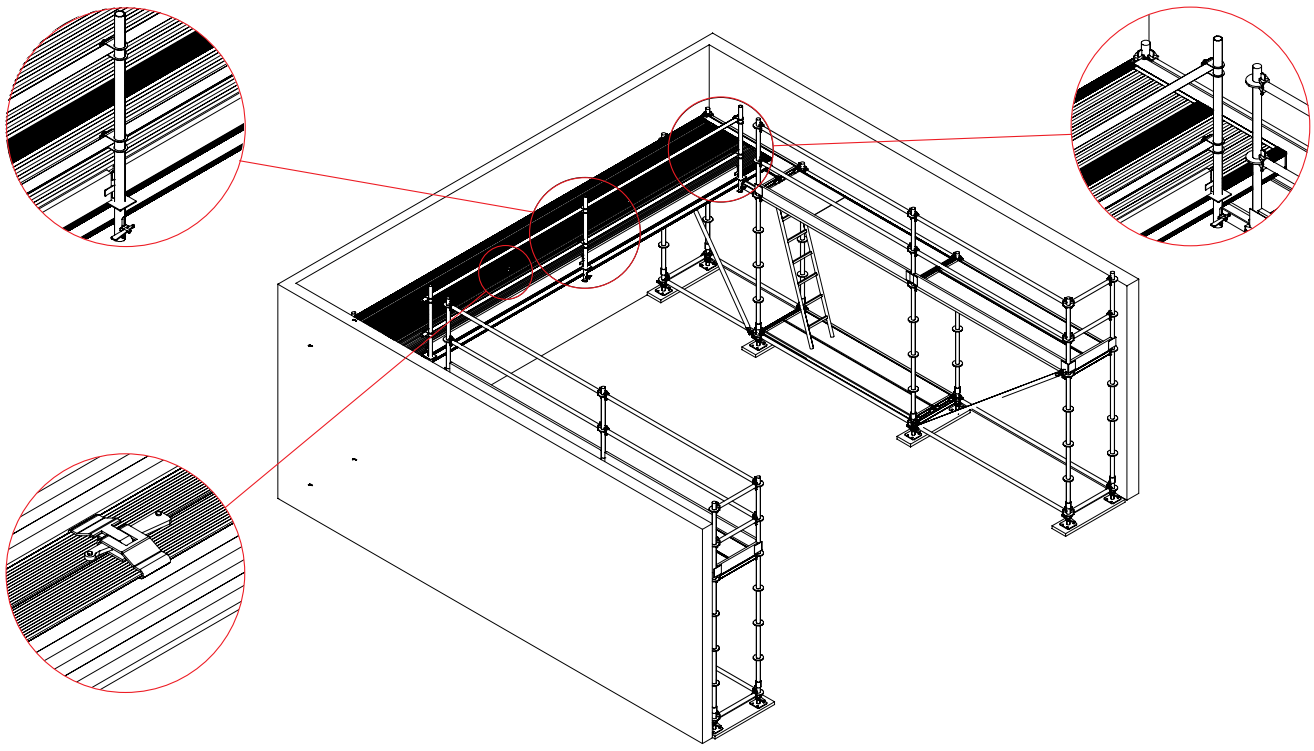

MODULAR SCAFFOLDING – ROTAX Plus
EXAMPLES OF MOBILE SCAFFOLDING

17. Wall mobile scaffolding – ROTAX Plus system

	Working height [m]			4.53	6.53	8.53
	Scaffolding height [m]			3.53	5.53	7.53
	Working platform height [m]			2.53	4.53	6.53
	No.	COMPONENT NAME	SYMBOL	NUMBER OF COMPONENTS		
MOBILE SCAFFOLDING UNIT	1.	Mobile scaffolding guide beam	E571173	2	2	2
	2.	Base jack with two nuts	E571175	4	4	4
	3.	Road wheel	MP-116	4	4	4
	4.	Horizontal brace, 2.57 m**	E283825	2	2	2
SCAFFOLDING STRUCTURE	5.	Standard pipe 4 m	E440540	–	–	2
	6.	Rotating connector	E581319	–	–	4
	7.	Initial component	E371305	4	4	4
	8.	Stand, 2.0 m	E371420	2	4	6
	9.	Stand, 1.0 m	E371410	4	4	4
	10.	Steel platform, 0.32 x 2.57 m*	E491325	1	1	1
	11.	Complete aluminium and plywood platform, Plus, 2.57 m*	E491925	2	2	2
	12.	Passing platform, w ladder, Plus, 2.57 m*	E492125	1	2	3
	13.	Horizontal transom, 2.57*	E371825	7	13	19
	14.	Horizontal transom, 0.73 m	E371807	6	10	14
	15.	U-diagonal, 0.73 m	E372407	2	4	6
	16.	Vertical brace, 2.57 x 2.0 m*	E373125	2	4	6
	17.	Vertical brace, 0.73 x 2.0 m	E373107	2	4	6
	18.	Wooden toe board, 2.57 m*	E375125	2	4	6
	19.	Wooden toe board, 0.73 m	E375107	2	4	6
	20.	Platform protection, 0.73 m	E374507	2	4	6
	21.	Protection cotter pin	E511100	4	8	12
		Ballast for working inside building (pce.)	1 pce. = 26 kg	–	–	–
		Ballast for working outside building (pce.)		–	6	8

* replacement parts for bay 3.07 m

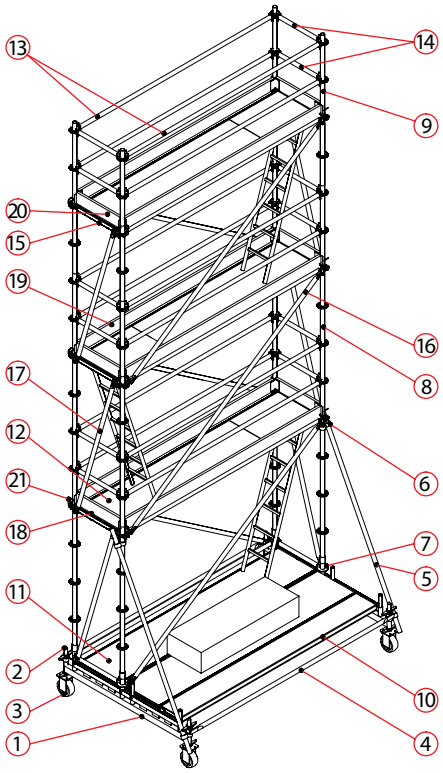

18. Ceiling mobile scaffolding – ROTAX Plus system

	Working height [m]		4.53	6.53	8.53	10.53
	Scaffolding height [m]		3.53	5.53	7.53	9.53
	Working platform height [m]		2.53	4.53	6.53	8.53
	No.	COMPONENT NAME	SYMBOL	NUMBER OF COMPONENTS		
MOBILE SCAFFOLDING UNIT	1.	Mobile scaffolding guide beam	E571173	2	2	2	2
	2.	Base jack with two nuts	E571175	4	4	4	4
	3.	Road wheel	MP-116	4	4	4	4
	4.	Horizontal brace, 2.57 m**	E283825	2	2	2	2
SCAFFOLDING STRUCTURE	5.	Initial component	E371305	8	8	8	8
	6.	Stand, 2.0 m	E371420	8	16	24	32
	7.	Stand, 1.0 m	E371410	8	8	8	8
	8.	Steel platform, 0.32 x 2.57 m*	E491325	1	1	1	1
	9.	Complete aluminium and plywood platform, Plus, 2.57 m*	E491925	3	4	5	6
	10.	Passing platform, with ladder, Plus, 2.57 m*	E492125	1	2	3	4
	11.	Horizontal transom, 2.57*	E371825	10	18	26	34
	12.	Horizontal transom, 0.73 m	E371807	12	20	28	36
	13.	U-diagonal, 0.73 m	E372407	4	8	12	16
	14.	Wedge connection	E373900	6	8	10	12
	15.	Vertical brace, 2.57 x 2.0 m*	E373125	2	4	6	8
	16.	Vertical brace, 0.73 x 2.0 m	E373107	4	8	12	16
	17.	Wooden toe board, 2.57 m*	E375125	2	4	6	8
	18.	Wooden toe board, 0.73 m	E375107	4	8	12	16
	19.	Platform protection, 0.73 m	E374507	4	8	12	16
	20.	Protection cotter pin	E511100	8	16	24	32
		Ballast for working inside building (pce.)	1 pce. = 26 kg	–	–	–	–
		Ballast for working outside building (pce.)		–	–	7	2x7

* replacement parts for bay 3.07 m

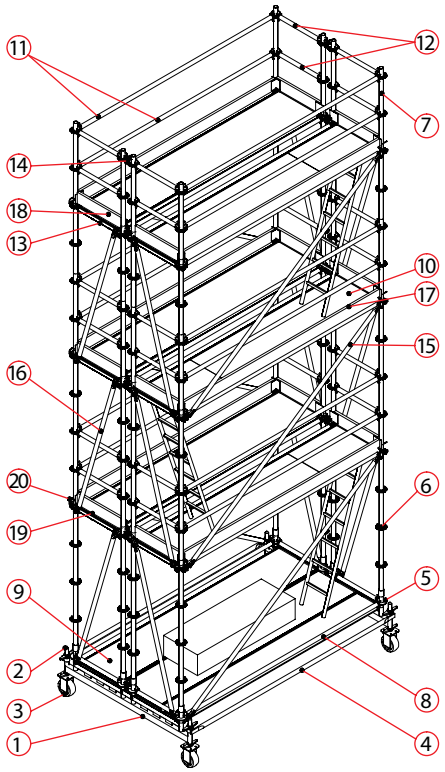

MODULAR SCAFFOLDING – ROTAX Plus
STAIRCASES

19. Free-standing staircase – ROTAX Plus system

No.	COMPONENT NAME	SYMBOL	STAIRCASE HEIGHT [m]										
			4	6	8	10	12	14	16	18	20	22	24
1.	Standard pipe, 3.0 m	E440030	2	2	2	2	2	2	2	2	2	2	2
2.	External railing, 2.57 m	E374925	1	2	3	4	5	6	7	8	9	10	11
3.	Internal railing	E286300	3	4	5	6	7	8	9	10	11	12	13
4.	Railing height	E374800	2	2	2	2	2	2	2	2	2	2	2
5.	Aluminium stairs, 2.57 m	E286225	2	3	4	5	6	7	8	9	10	11	12
6.	Anchoring connector, with hook, 0.8 m	E286508	4	6	8	10	12	14	16	18	20	22	24
7.	Initial component	E371305	4	4	4	4	4	4	4	4	4	4	4
8.	Stand, 1.0 m	E371410	5	5	5	5	5	5	5	5	5	5	5
9.	Stand, 2.0 m	E371420	8	12	16	20	24	28	32	36	40	44	48
10.	Horizontal transom, 1.57 m	E371815	9	11	13	15	17	19	21	23	25	27	29
11.	Horizontal transom, 2.57 m	E371825	8	10	12	14	16	18	20	22	24	26	28
12.	Vertical brace, 1.57 x 2.0 m	E373115	3	5	7	9	11	13	15	17	19	21	23
13.	Vertical brace, 2.57 x 2.0 m	E373125	4	6	8	10	12	14	16	18	20	22	24
14.	U-transom, double, 1.57 m	E373515	4	6	8	10	12	14	16	18	20	22	24
15.	Platform protection, 1.57 m	E374515	4	6	8	10	12	14	16	18	20	22	24
16.	Steel platform, 0.16 x 2.57 m	E491225	1	2	3	4	5	6	7	8	9	10	11
17.	Adjustable base jack, 0.8 m	E511208	4	4	4	4	4	4	4	4	4	4	4
18.	Normal connector	E581119	8	10	12	14	16	18	20	22	24	26	28
19.	Pipe connector	E581701	1	1	1	1	1	1	1	1	1	1	1

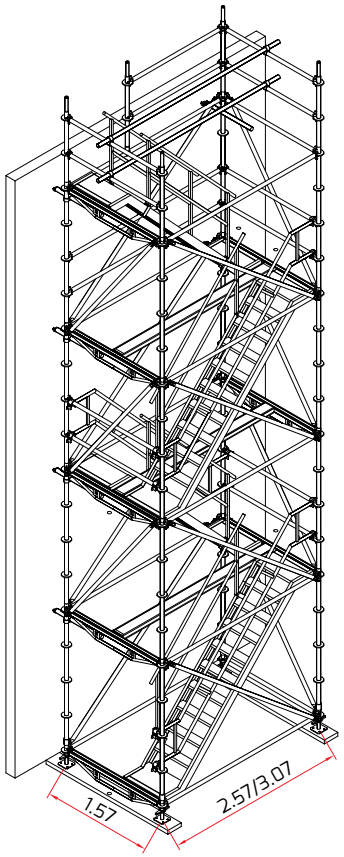

20. Free-standing staircase with load-bearing beam – ROTAX Plus system

No.	COMPONENT NAME	SYMBOL	STAIRCASE HEIGHT (m)										
			4	6	8	10	12	14	16	18	20	22	24
1.	Initial component	E371305	12	12	12	12	12	12	12	12	12	12	12
2.	Stand, 1.0 m	E371410	12	12	12	12	12	12	12	12	12	12	12
3.	Stand, 2.0 m	E371420	18	30	42	54	66	78	90	102	114	126	138
4.	Horizontal transom, 1.09 m	E371810	47	66	85	104	123	142	161	180	199	218	237
5.	Stairs load-bearing beam, 2.57 x 2.0 m	E377025	4	6	8	10	12	14	16	18	20	22	24
6.	Horizontal transom, 2.57 m	E371825	2	3	4	5	6	7	8	9	10	11	12
7.	Vertical brace, 2.57 x 2.0 m	E373125	8	12	16	20	24	28	32	36	40	44	48
8.	Vertical brace, 1.09 x 2.0 m	E373110	11	19	27	35	43	51	59	67	75	83	91
9.	U-diagonal, reinforced, 1.09 m	E372410	8	11	14	17	20	23	26	29	32	35	38
10.	Platform protection, 1.09 m	E374510	8	11	14	17	20	23	26	29	32	35	38
11.	Steel toe board, 1.09 m	E375110	8	12	16	20	24	28	32	36	40	44	48
12.	Steel platform, 1.09 m	E281310	35	51	67	83	99	115	131	147	163	179	195
13.	Adjustable base jack, 0.8 m	E511208	12	12	12	12	12	12	12	12	12	12	12
14.	Normal connector	E581119	10	16	22	28	34	40	46	52	58	64	70
15.	Anchoring connector, with hook, 0.8 m	E286508	6	10	14	18	22	26	30	34	38	42	46
16.	Standard pipe, 3.0 m	E440030	2	3	4	5	6	7	8	9	10	11	12

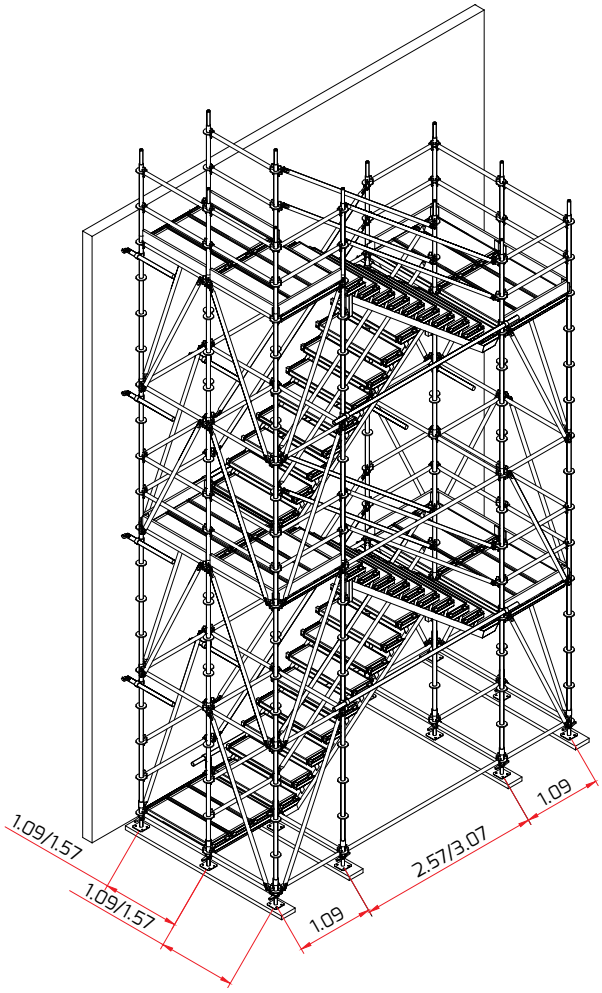

21. Staircase at scaffolding – ROTAX Plus system

No.	COMPONENT NAME	SYMBOL	STAIRCASE HEIGHT [m]										
			4	6	8	10	12	14	16	18	20	22	24
1.	External railing, 2.57 m	E374925	2	3	4	5	6	7	8	9	10	11	12
2.	Internal railing	E286300	2	3	4	5	6	7	8	9	10	11	12
3.	Railing handle	E374800	2	2	2	2	2	2	2	2	2	2	2
4.	Aluminium stairs, 2.57 m	E286225	2	3	4	5	6	7	8	9	10	11	12
5.	Initial components	E371305	2	2	2	2	2	2	2	2	2	2	2
6.	Stand, 1.0 m	E371410	2	2	2	2	2	2	2	2	2	2	2
7.	Stand, 2.0 m	E371420	4	6	8	10	12	14	16	18	20	22	24
8.	Horizontal transom, 0.73 m	E371807	8	12	16	20	24	28	32	36	40	44	48
9.	Horizontal transom, 1.57 m	E371815	2	2	2	2	2	2	2	2	2	2	2
10.	Horizontal transom, 2.57 m	E371825	3	4	5	6	7	8	9	10	11	12	13
11.	Vertical brace, 2.57 x 2.0 m	E373125	2	3	4	5	6	7	8	9	10	11	12
12.	U-diagonal, 0.73 m	E372407	4	6	8	10	12	14	16	18	20	22	24
13.	Platform protection, 0.73 m	E374507	4	6	8	10	12	14	16	18	20	22	24
14.	Adjustable base jack, 0.8 m	E511208	2	2	2	2	2	2	2	2	2	2	2
15.	Wooden toe board, 0.73 m	E375107	3	5	7	9	11	13	15	17	19	21	23
16.	Pipe connector	E581701	1	1	1	1	1	1	1	1	1	1	1

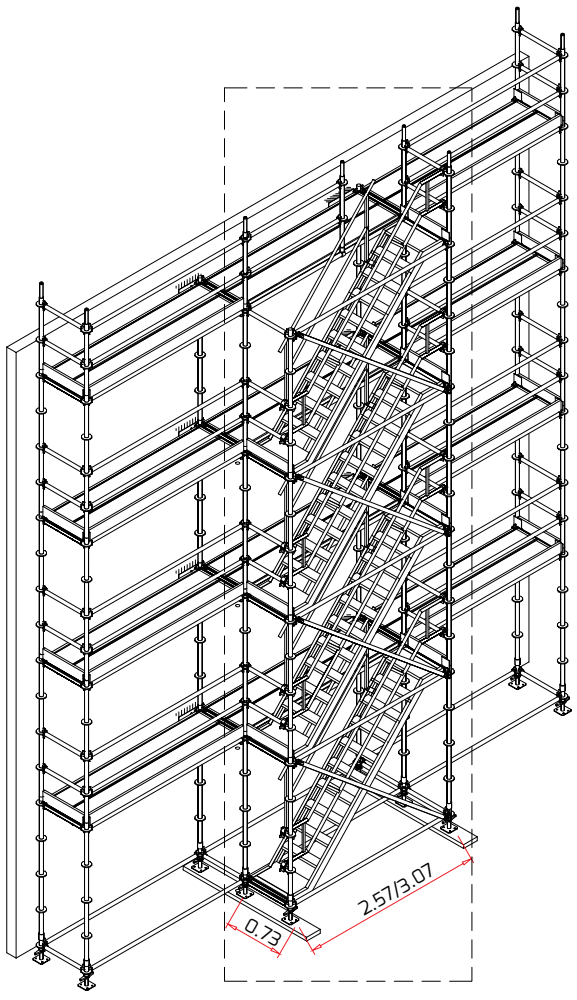

ANNEX NO. 1
SCAFFOLDING COMMISSION PROTOCOL

MOSTOSTAL SCAFFOLDING FORMWORK

ALTRAD

SCAFFOLDING COMMISSION PROTOCOL

No. _____ of _____

To agreement no. _____ of _____

Contractor .... Authorised person ..... Phone no.	User .... Authorised person ..... Phone no. .....
Scaffolding type: ☐ Frame ☐ Wall ☐ ROTAX modular ☐ Free-standing ☐ Mobile ☐ Hanging ☐ Facade ☐	Assembly site ....
Scaffolding parameters: Structure dimensions ..... Net dimensions ..... Structure load capacity ..... Working platform permissible load capacity ..... kNm^2	Scaffolding purpose ....
Earthing resistance ..... Ω	Additional equipment ....
Subsequent inspection dates	

Declaration and confirmation

1. Assembly Contractor certifies that the scaffolding described in this protocol is complete. The scaffolding was assembled according to the best construction practices and the assembly manual issued by the manufacturer as well as according to the OHS requirements. The assembly was performed by certified fitters.
2. The scaffolding structure may be modified only by the Assembly Contractor.
3. The Assembly Contractor provides the following along with this protocol:
   a) scaffolding scheme
   b) scaffolding assembly manual
   c) .....
   d) .....
4. Scaffolding user accepts this scaffolding for use without any reservations and declares that he/she is aware of the rules of use resulting from the assembly manual.
5. Before each use of the scaffolding the User should check its technical condition and completeness.
6. Commission in the following panel confirms the scaffolding hand-over after assembly and acceptance for use.
   a) .... – User
   b) .... – User
   c) .... – Contractor
   full name position signature

Application date for scaffolding disassembly: .....

Localization of ALTRAD-MOSTOSTAL

MOSTOSTAL
SCAFFOLDING
FORMWORK

Dorota Jaszczuk - Commercial Director
GSM +48 692 416 723
e-mail: d.jaszczuk@altrad-mostostal.pl

Katarzyna Kalicka - Sales Manager
(Mazowieckie, Podlaskie, Łódzkie, Warmińsko-Mazurskie Provinces)
GSM +48 604 481 381
e-mail: k.kalicka@altrad-mostostal.pl

Katarzyna Matejuk - Sales Manager
GSM +48 608 065 535
e-mail: k.matejuk@altrad-mostostal.pl

Michał Sędzimierz - Sales Manager
GSM +48 606 471 200
e-mail: m.sedzimierz@altrad-mostostal.pl

Bogdan Bentkowski - Sales Manager
GSM +48 602 578 862
e-mail: b.bentkowski@altrad-mostostal.pl

MOSTOSTAL
SCAFFOLDING
FORMWORK

ALTRAD-MOSTOSTAL Spółka z o.o.
ul. Starzyńskiego 1, 08-110 Siedlce - Poland
Tel. +48 25 644 72 84 - Fax +48 25 633 32 78 - Email: handlowy@altrad-mostostal.pl
www.altrad-mostostal.pl

12.2018